AIR TECH SYSTEMS

LTG Fahrtwind-Simulators

Proven technology with more features

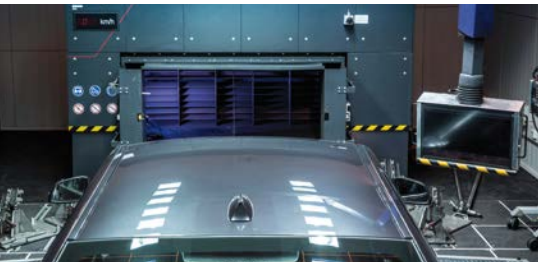

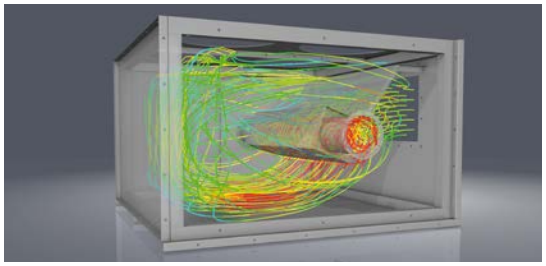

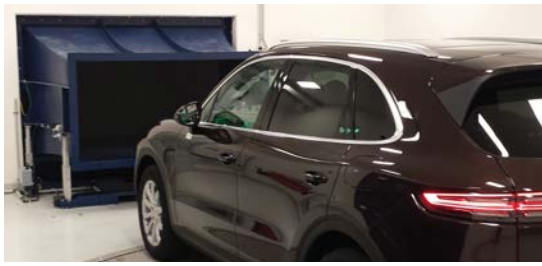

LTG Fahrtwind-Simulators find their application in various (automotive) areas. Benefit from 20 years of wind simulation experience with more than 200 reference facilities.

LTG Fahrtwind-Simulator Type VQF 500/1250

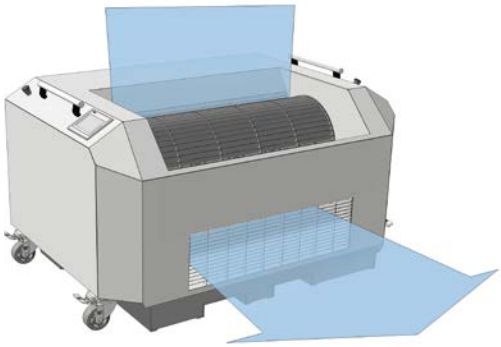

Now up to 100 mph, WLTP and RDE – ready-to-connect solution in a compact design

- Established standard for new construction and refurbishment in emission test cells worldwide
- Simulation up to 100 mph with unique tangential fan technology, realistic with extremely uniform air distribution
- Meets the requirements of WLTP, CFR §1066 and RDE
- Matching drive solutions to move unit in different directions for every budget
- Extensive range of options: for extreme temperatures, high speeds or variable outlet areas

LTG Fahrtwind-Simulator Type VAF

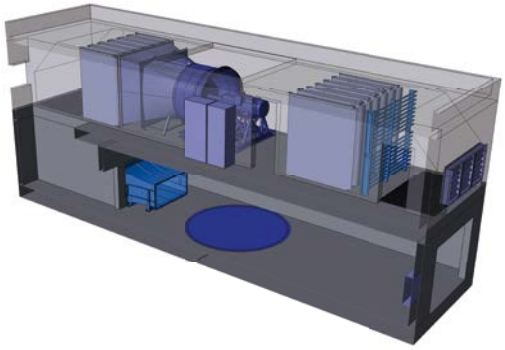

Small wind tunnels as a complete system for budget savings

- Individual and customized solutions for final quality assurance directly at production sites
- Simulations up to 125 mph with a large outlet area
- Reproducible measurement
- Low-noise operation
- Space saving

www.LTG-INC.net

AIR TECH SYSTEMS

SC03 Fahrtwind-Simulator Type VRSF 1120

With high-performance fan technology

- Compact unit for SC03 testing
- 18 square feet (4.25 x 4.25) outlet area
- All-in-one solution including on board control
- Uniform and precise airflow meeting CFR §1066
- Wide range of accessories:
  heigth adjustment, drive solutions, cooling kit, adapter nozzles for WLTP

Engineering Services

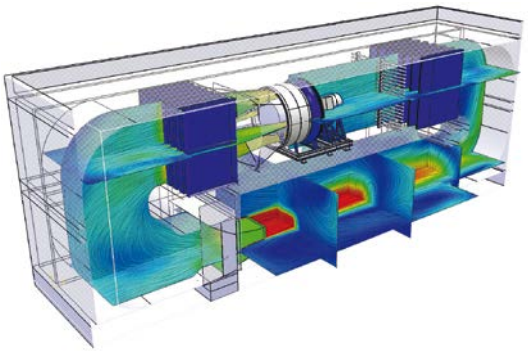

Benefit from our expertise

- Computer-aided flow simulation (CFD) for visualization of difficult flow simulations
- Development of customized solutions

LTG Incorporated
105 Corporate Drive, Suite E
Spartanburg, SC 29303
USA
Tel.: +1 864 599-6340
Fax: +1 864 599-6344
E-Mail: info@LTG-INC.net
www.LTG-INC.net

© LTG Incorporated · (10/2018)
Former editions are invalid · Subject to technical modifications