AIR TECH
SYSTEMS

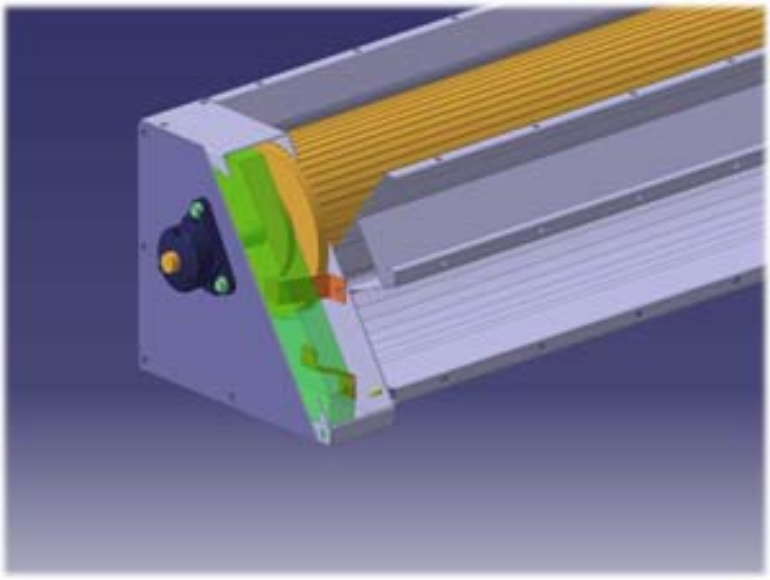

Technical Documentation

LTG High Performance Tangential Fans

Series VQN / VQH

Impeller diameter from 200 to 500 mm

LTG High Performance Tangential Fans
Series VQN, VQH

Content	Page

Reference

Dimensions stated in this brochure are in mm.
Dimensions stated in this brochure are subject to
General Tolerances according to DIN ISO 2768-cL.

LTG High Performance Tangential Fans-
an advantage for best heating, cooling, drying, blasting

Many production processes require an extended linear and absolutely even distribution of air or other gases over a certain area.

The special design of, High Performance Tangential Fans provides the optimum solution for these requirements.

The robust design and the use of high quality materials assure a long life expectancy.

The way these fans work, allowing even air distribution without additional baffles and vanes, and the space-saving design, make the use of tangential fans very economic.

Flow principle

In a tangential fan, the air is drawn in over the entire length of the fan impeller. Inside the impeller the airflow is diverted and accelerated by the vortex created by the rotation of the impeller.

The airstream then exits over the entire length of the impeller ① on the discharge side. The vortex ② separates the intake and discharge side of the fan at the narrowest point between the impeller and the vortex builder. Together with the fan scroll ③ the vortex directs the airflow. This results in an almost uniform laminar airflow over the entire outlet width of the fan.

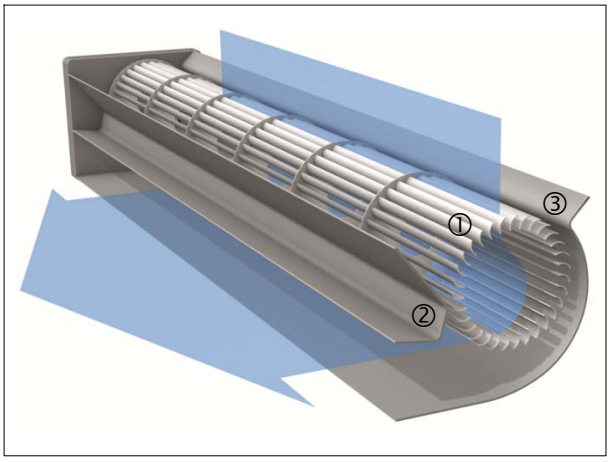

① impeller
② vortex inducer
③ fan scroll

Advantages

- Uniform, extended airflow over large areas.
- Space saving installation due to 90° or 180° airflow pattern.
- Fan length can be matched exactly to machine width.
- Airflow conditions remain the same even for wider machines (simplified design and drafting in case of modular systems).
- Fans perform well in any mounting position. Drive can be mounted on right or left hand side.
- Quiet operation due to optimized impeller and housing design.
- Long life expectancy due to the robust design and location of bearings outside the hot air zone.
- Explosion-proof models according to ATEX available.

Application of LTG High Performance Tangential Fans

- Agricultural technology,
- air-conditioning technology
- apparatus engineering
- automotive industry
- bakery technology
- biomedical industry
- building material industry
- chemical industry
- cleaning technology
- control panel technology
- dedusting technology
- drying technology
- electronic industry
- environmental simulations
- food industry
- furnace technology
- heat treatment technology
- mechanical and plant engineering
- medical technology
- packaging industry
- paper industry
- pharmaceutical industry
- power plant engineering
- process engineering
- railway technology
- refrigeration technology
- store design
- surface technology
- swimming pool technology
- textile machinery design
- tobacco industry
- transportation cooling
- wood industry
- ...

LTG High Performance Tangential Fans
Series VQN, VQH, Manufacturing Program

Tangential Fan Type VQN L 200/400/Z, left hand drive

Type VQN

Service Conditions

gas temperatures:
-25 °C up to +120 °C
ambient temperatures:
-25 °C up to +40 °C
permissible bearing temperatures:
-25 °C up to +120 °C

Specification and design features
Tangential fan with shaft end on the drive side.
Rigid bolted casing with duct connection flange for suction side and discharge side. The impeller is both sides bedded in self-aligning ball bearings in flange bearing frames. Bearing design life is approx. *20 000 operating hours (90% statistical). Both bearings have grease nipples. The impeller is balanced according to DIN ISO 1940/1, grade 6.3.

With the suction opening on top, viewed against the discharge opening, the drive side shaft end can be right hand or left hand.

Materials

galvanized steel
stainless steel 1.4541

All shaft drives with adjusting spring according to DIN 6885/1.

Available Sizes

Type-Code

VQ N L 200 / 1000 / Z

- Material:
  Z - Steel galv.
  E - Stainless steel
- Length: 400 - 3000
- Diameter: 200 - 500
- Drive side:
  L - Left, R - Right
- Conveying media temp. range:
  N – -25 °C bis 120 °C
  H – -25 °C bis 300 °C
- Tangential fan

Type VQH

Service Conditions

gas temperatures:
-25 °C up to +300 °C
ambient temperatures:
-25 °C up to +40 °C
permissible bearing temperatures:
-25 °C up to +120 °C

Specification and design features
Tangential fan with shaft end on the drive side. Rigid bolted casing with duct connection flange for suction side and discharge side. The impeller is both sides bedded in self-aligning ball bearings in flange bearing frames. Bearing design life is approx. *20 000 operating hours (90% statistical). Bearings protected against high gas temperatures by heat insulating material. Insulation thickness 50 mm. Both bearings have grease nipples. The impeller is balanced according to DIN ISO 1940/1, grade 6.3.
With the suction opening on top, viewed against the discharge opening, the drive side shaft end can be right hand or left hand.

Materials

galvanized steel
stainless steel 1.4541

All shaft drives with adjusting spring according to DIN 6885/1.

active impeller length [mm]	400	500	630	800	1000	1250	1600	2000	2500	3000
impeller diameter [mm]										
200	○	○	○	○	○	○	○			
250		○	○	○	○	○	○	○		
315			○	○	○	○	○	○		
400				○	○	○	○	○	○	
500					○	○	○	○	○	○

* Under normal operating conditions, average load, without impacts, vibrations or impurity.

LTG High Performance Tangential Fans
Series VQN, VQH, Acoustics, Greasing Intervals

The catalogue data are based on:

The specific mass of air is: $\varrho = 1.2$ kg/m^3. The performance data are laboratory tested according to EN ISO 5801:2008 with unobstructed air flow

Acoustical data

The acoustical data are for discharge side, tested in a reverberant field. The A-weighted sound power level L_{WA} can be transformed into a A-weighted sound pressure level by the equation $L_{pA} = L_{WA} - 10 \log S/1\,m^2$. For this the exact total applicable panel area S can be used.
The sound pressure level in the free field in 1 m distance (full spheric sound radiation) is approx. 11 dB less than the sound power level. The equation for the unweighted sound power level according to VDI 2081 is:
$L_W = L_{Wspec} + 10 \lg V + 20 \lg \Delta p_t$. For the total pressure Δp_t use Pa and for the air volume use m^3/s.

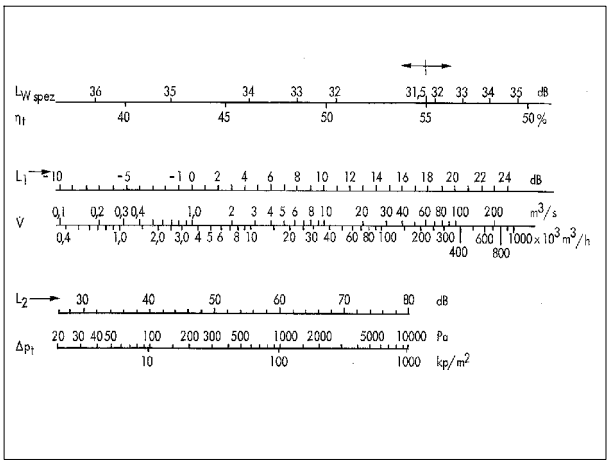

Unweighted sound power level L_W [dB]
$L_W = L_{Wspez.} + L_1 + L_2$ [dB]

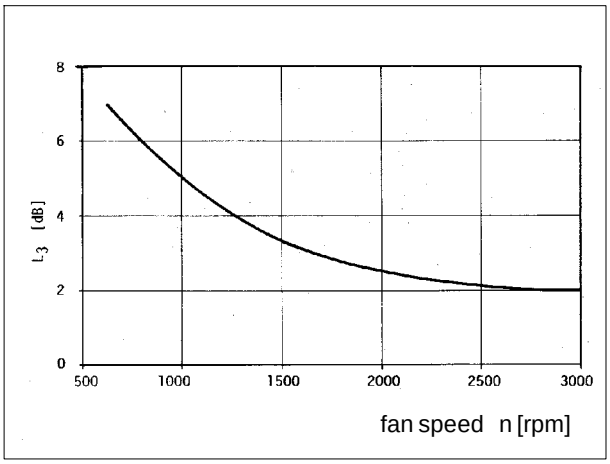

A-weighted sound power level L_{WA} [dB(A)]
$L_{WA} = L_W - L_3$ [dB(A)]

Greasing frequency

At bearing temperatures above +70°C the frequency of greasing must be increased by two times with every 15 K temperature rise.
Don't exceed the temperature rating of the grease. At operating temperatures below +70°C the frequency of greasing is reduced. At operating temperatures below +50°C the time between greasing can be doubled.
The greasing requirements are also influenced by several other factors. In case of vertical installation for example the frequency is doubled.
Harsh operating and environmental conditions as well as variable speeds also have a shortening effect on the greasing frequency.
In such cases please contact LTG Aktiengesellschaft.

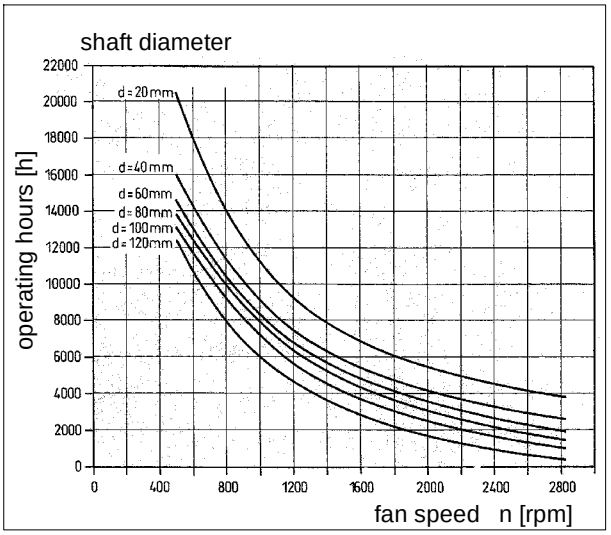

The diagram is for +70 °C

LTG High Performance Tangential Fans
Series VQN, VQH, Impeller Diameter 200 mm

Dimension sheets, technical data

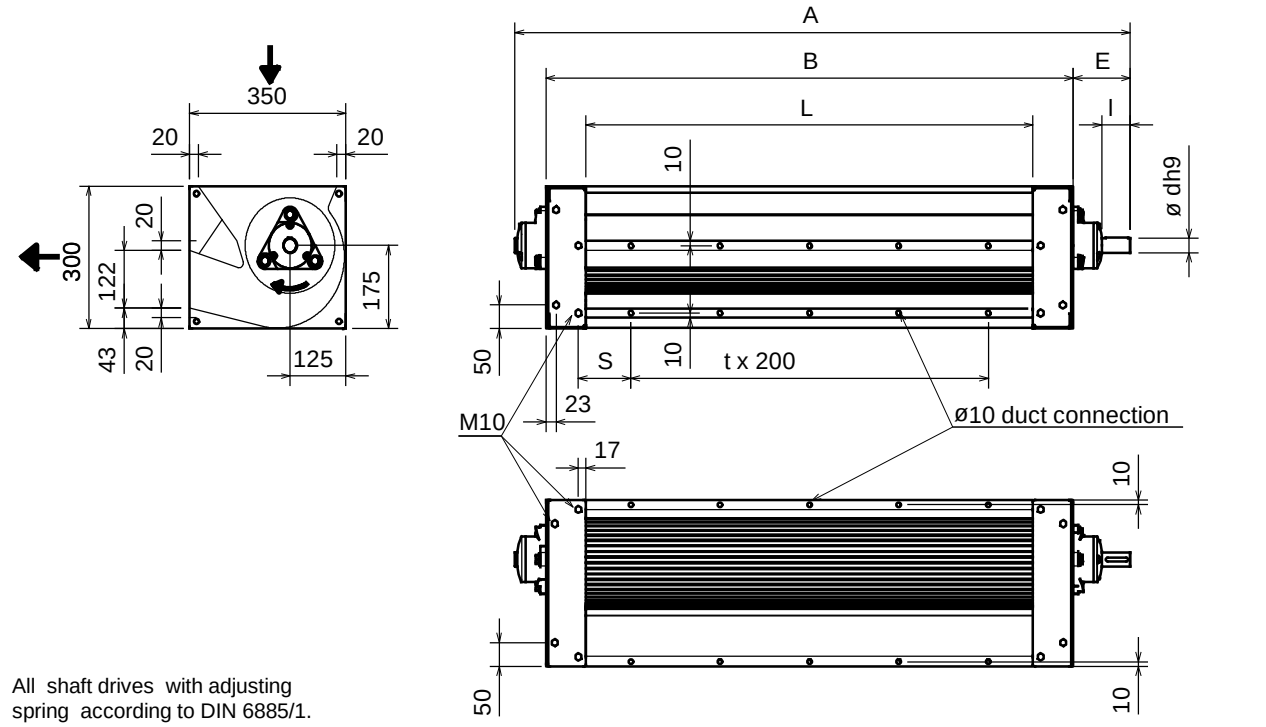

All shaft drives with adjusting spring according to DIN 6885/1.

Type VQN	Type	D/L	A [mm]	B [mm]	L [mm]	d [mm]	E [mm]	I [mm]	t	S [mm]	$n_{max.}$ [rpm]	P max. Motor [KW]	Weight approx. [kg]
gas	VQN	200 / 400	777	580	400	30	128	60	1	117	2769	11	38
temperatures:	VQN	200 / 500	877	680	500	30	128	60	2	67	2769	11	45
-25 up to +120 °C	VQN	200 / 630	1007	810	630	30	128	60	2	132	2769	11	50
	VQN	200 / 800	1177	980	800	30	128	60	3	117	2196	11	57
	VQN	200 / 1000	1377	1180	1000	30	128	60	4	117	1719	7,5	65
	VQN	200 / 1250	1627	1430	1250	30	128	60	5	142	1337	5,5	75
	VQN	200 / 1600	1977	1780	1600	30	128	60	7	117	1050	4	89

Type VQH	Type	D/L	A [mm]	B [mm]	L [mm]	d [mm]	E [mm]	I [mm]	t	S [mm]	$n_{max.}$ [rpm]	P Max. Motor [KW]	Weight approx. [kg]
gas	VQH	200 / 400	891	680	400	35	133	60	1	117	2769	15	44
temperatures:	VQH	200 / 500	991	780	500	35	133	60	2	67	2769	15	51
-25 up to +300 °C	VQH	200 / 630	1121	910	630	35	133	60	2	132	2196	11	56
	VQH	200 / 800	1291	1080	800	35	133	60	3	117	1719	7,5	63
	VQH	200 / 1000	1491	1280	1000	35	133	60	4	117	1337	5,5	71
	VQH	200 / 1250	1741	1530	1250	35	133	60	5	142	1050	4	81
	VQH	200 / 1600	2091	1880	1600	35	133	60	7	117	859	3	95

Designs with higher motor power on request.

LTG High Performance Tangential Fans
Series VQN, VQH, Impeller Diameter 200 mm

Fan Curves

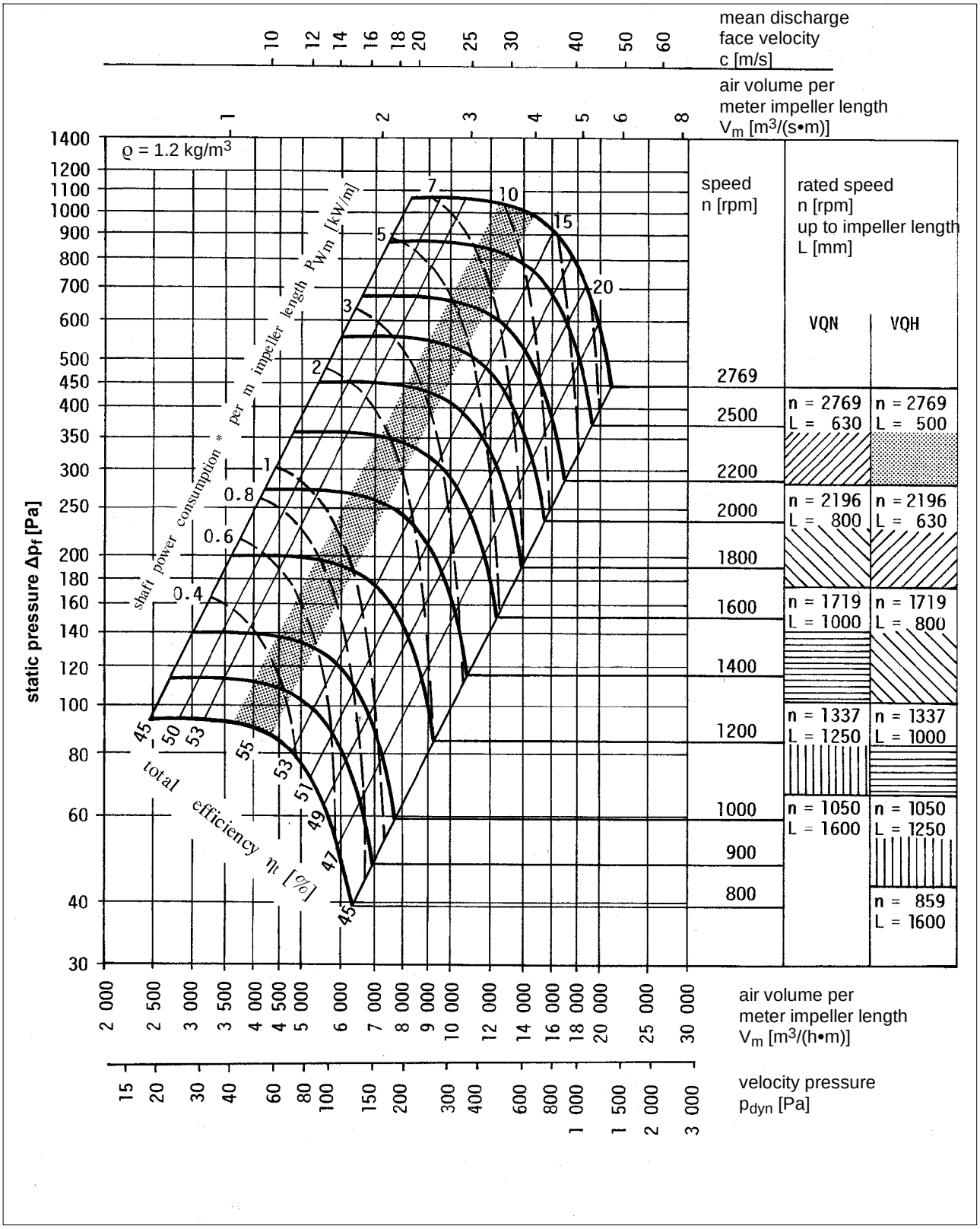

The shaft power consumption shown in this diagram does not include belt drive losses.

LTG High Performance Tangential Fans
Series VQN, VQH, Impeller Diameter 250 mm

Dimension sheets, technical data

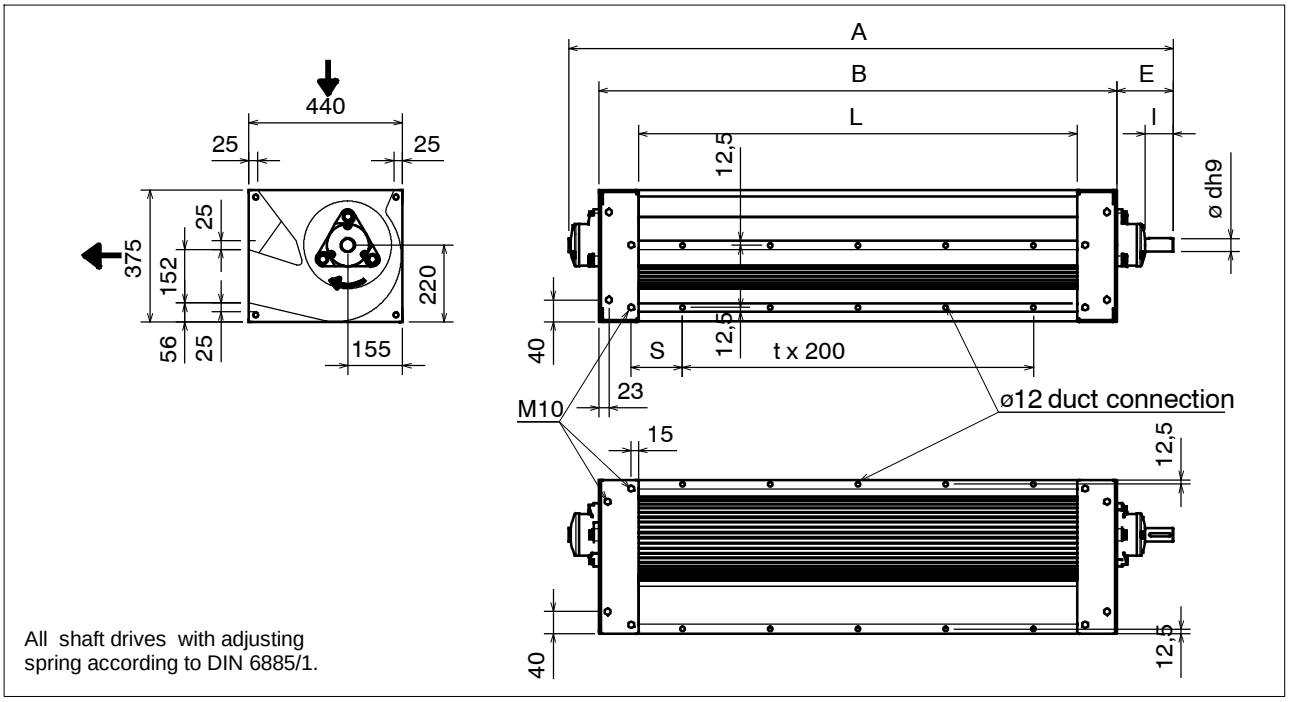

Type VQN	Type	D/L	A [mm]	B [mm]	L [mm]	d [mm]	E [mm]	I [mm]	t	S [mm]	$n_{max.}$ [rpm]	P max. Motor [KW]	Weight approx. [kg]
gas	VQN	250 / 500	877	680	500	30	128	60	2	67	2750	11	60
temperatures:	VQN	250 / 630	1007	810	630	30	128	60	2	130	2750	11	66
-25 up to +120 °C	VQN	250 / 800	1177	980	800	30	128	60	3	115	2215	11	73
	VQN	250 / 1000	1377	1180	1000	30	128	60	4	115	1757	11	82
	VQN	250 / 1250	1627	1430	1250	30	128	60	5	140	1375	7,5	93
	VQN	250 / 1600	1977	1780	1600	30	128	60	7	115	1070	5,5	109
	VQN	250 / 2000	2377	2180	2000	30	128	60	9	115	840	4	127

Type VQH	Type	D/L	A [mm]	B [mm]	L [mm]	d [mm]	E [mm]	I [mm]	t	S [mm]	$n_{max.}$ [rpm]	P max. Motor [KW]	Weight approx. [kg]
gas	VQH	250 / 500	991	780	500	35	133	60	2	67	2215	15	68
temperatures:	VQH	250 / 630	1121	910	630	35	133	60	2	130	2215	15	74
-25 up to +300 °C	VQH	250 / 800	1291	1080	800	35	133	60	3	115	1757	11	81
	VQH	250 / 1000	1491	1280	1000	35	133	60	4	115	1375	7,5	90
	VQH	250 / 1250	1741	1530	1250	35	133	60	5	140	1070	5,5	101
	VQH	250 / 1600	2091	1880	1600	35	133	60	7	115	840	4	117
	VQH	250 / 2000	2491	2280	2000	35	133	60	9	115	688	3	135

Designs with higher motor power on request.

LTG High Performance Tangential Fans
Series VQN, VQH, Impeller Diameter 250 mm

Fan curves

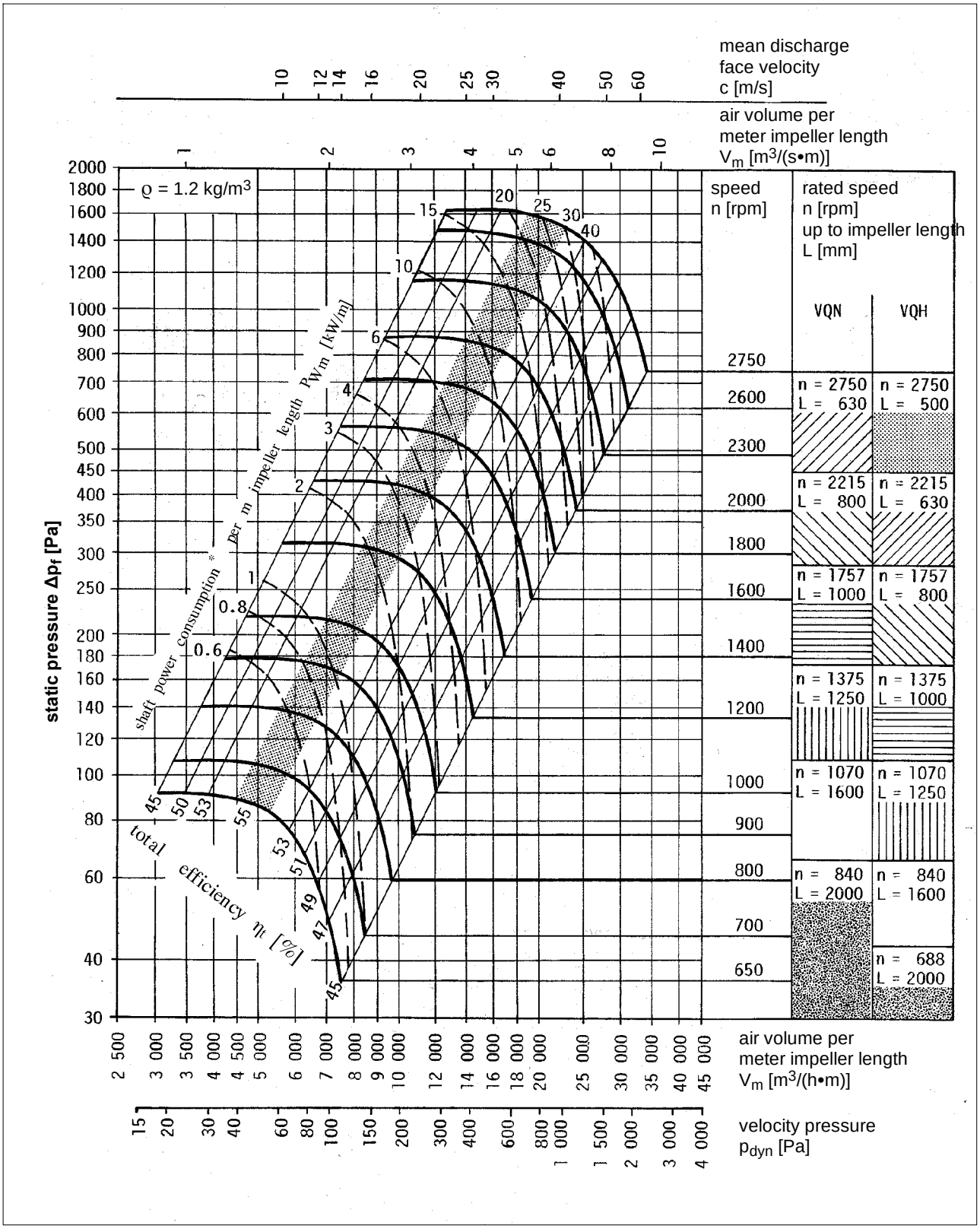

The shaft power consumption shown in this diagram does not include belt drive losses.

LTG High Performance Tangential Fans
Series VQN, VQH, Impeller Diameter 315 mm

Dimensions, technical data

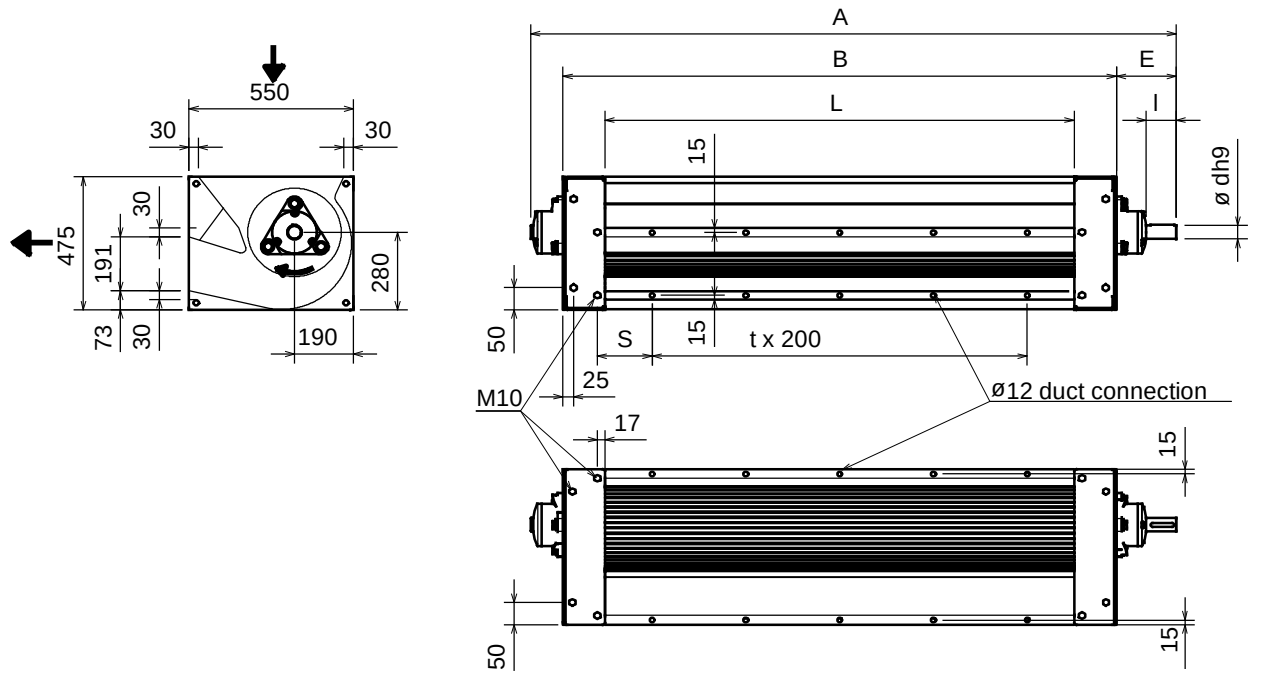

All shaft drives with adjusting spring according to DIN 6885/1.

Type VQN	Type	D/L	A [mm]	B [mm]	L [mm]	d [mm]	E [mm]	l [mm]	t	S [mm]	$n_{max.}$ [rpm]	P max. Motor [KW]	Weight approx. [kg]
gas	VQN	315 / 630	1007	810	630	30	128	60	2	132	2183	11	121
temperatures:	VQN	315 / 800	1177	980	800	30	128	60	3	117	2183	11	133
-25 up to +120 °C	VQN	315 / 1000	1377	1180	1000	30	128	60	4	117	1758	11	142
	VQN	315 / 1250	1627	1430	1250	30	128	60	5	142	1395	11	154
	VQN	315 / 1600	1977	1780	1600	30	128	60	7	142	1091	7,5	176
	VQN	315 / 2000	2377	2180	2000	30	128	60	9	142	849	5,5	193

Type VQH	Type	D/L	A [mm]	B [mm]	L [mm]	d [mm]	E [mm]	l [mm]	t	S [mm]	$n_{max.}$ [rpm]	P max. Motor [KW]	Weight approx. [kg]
gas	VQH	315 / 630	1121	910	630	35	133	60	2	132	2183	15	131
temperatures:	VQH	315 / 800	1291	1080	800	35	133	60	3	117	1758	15	143
-25 up to +300 °C	VQH	315 / 1000	1491	1280	1000	35	133	60	4	117	1395	11	153
	VQH	315 / 1250	1741	1530	1250	35	133	60	5	142	1091	7,5	163
	VQH	315 / 1600	2091	1880	1600	35	133	60	7	142	849	5,5	183
	VQH	315 / 2000	2491	2280	2000	35	133	60	9	142	667	4	203

Designs with higher motor power on request.

LTG High Performance Tangential Fans
Series VQN, VQH, Impeller Diameter 315 mm

Fan curves

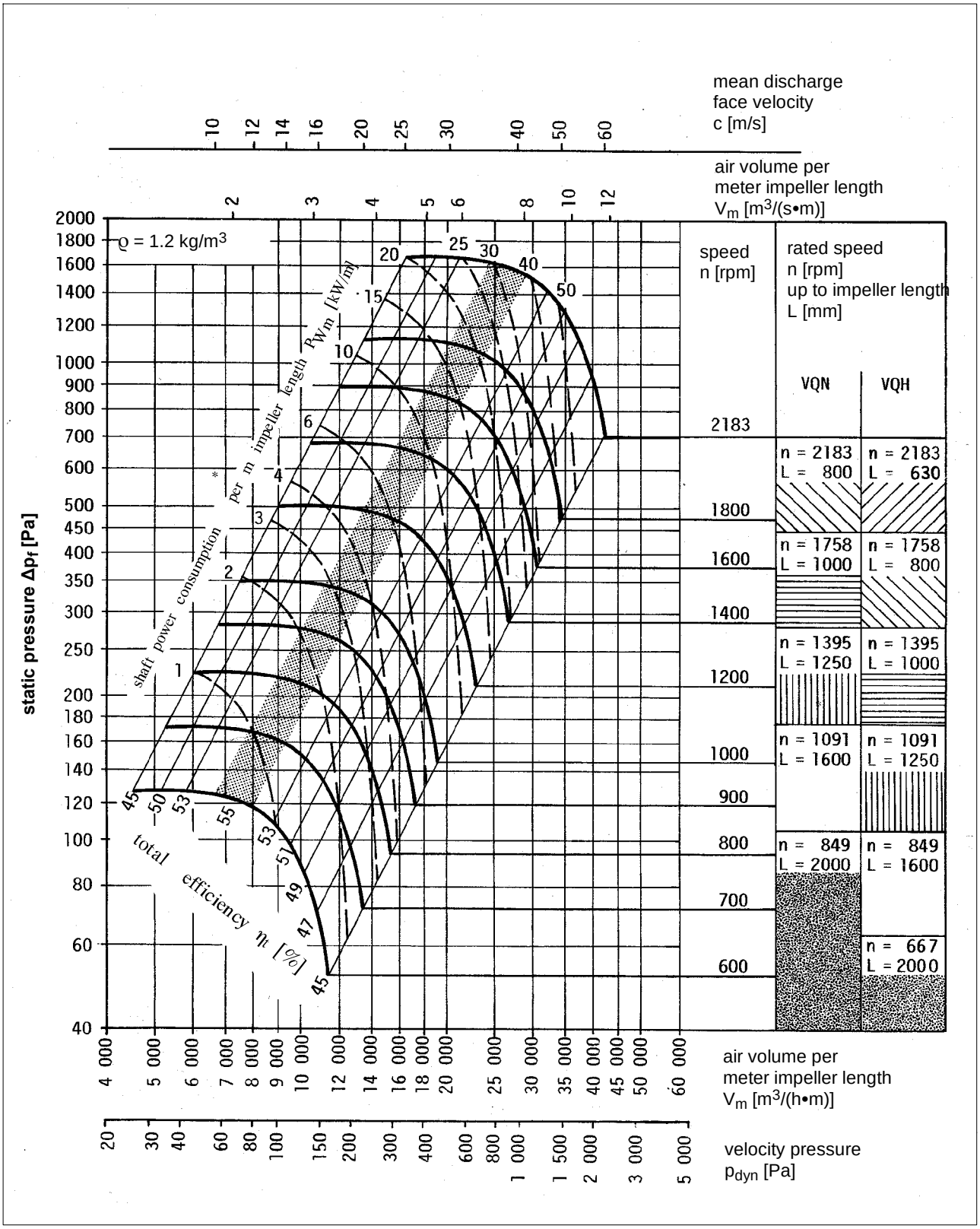

The shaft power consumption shown in this diagram does not include belt drive losses.

LTG High Performance Tangential Fans
Series VQN, VQH, Impeller Diameter 400 mm

Dimension sheets

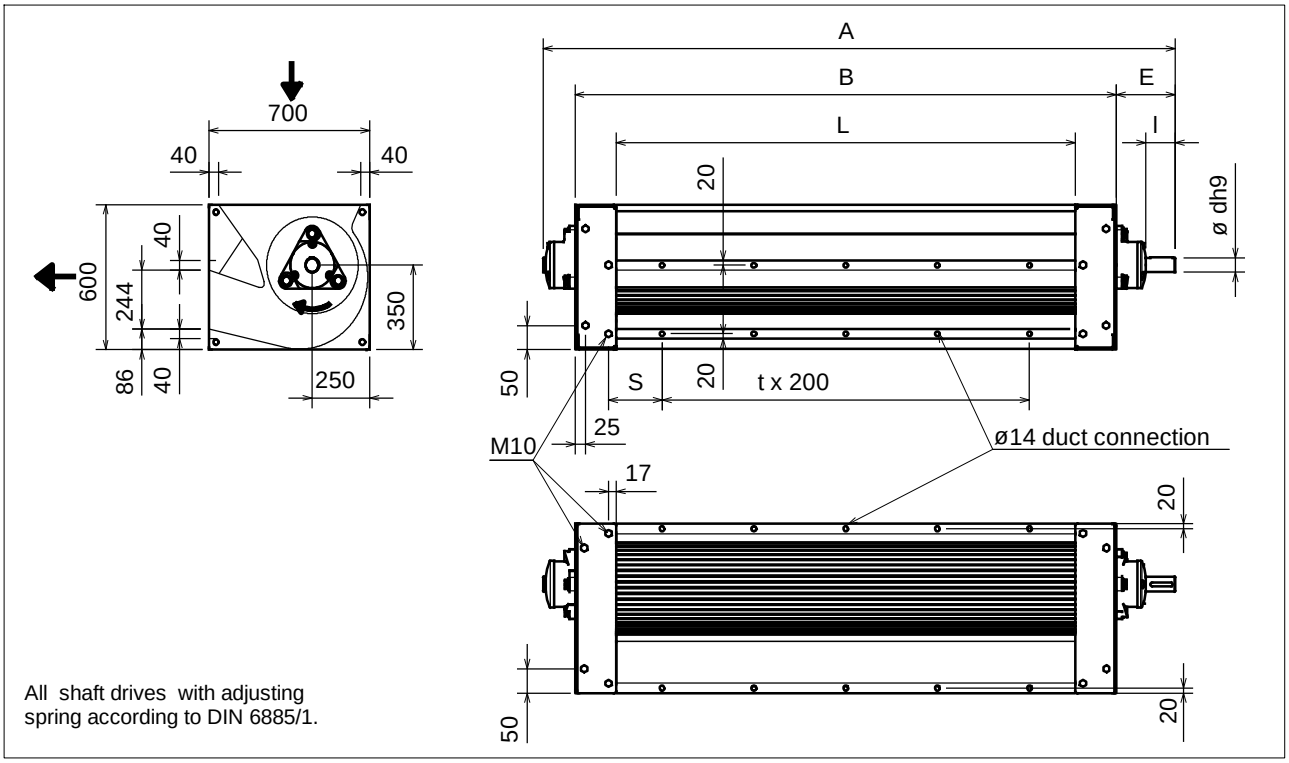

Type VQN	Type	D/L	A [mm]	B [mm]	L [mm]	d [mm]	E [mm]	I [mm]	t	S [mm]	$n_{max.}$ [rpm]	P max. Motor [KW]	Weight approx. [kg]
gas	VQN	400 / 800	1261	1026	800	40	155	80	3	117	1719	18,5	227
temperatures:	VQN	400 / 1000	1461	1226	1000	40	155	80	4	117	1719	18,5	243
-25 up to +120 °C	VQN	400 / 1250	1711	1476	1250	40	155	80	5	142	1385	18,5	259
	VQN	400 / 1600	2061	1826	1600	40	155	80	7	117	1098	15	263
	VQN	400 / 2000	2461	2226	2000	40	155	80	9	117	859	11	323
	VQN	400 / 2500	2961	2726	2500	40	155	80	11	167	668	7,5	363

Type VQH	Type	D/L	A [mm]	B [mm]	L [mm]	d [mm]	E [mm]	I [mm]	t	S [mm]	$n_{max.}$ [rpm]	P max. Motor [KW]	Weight approx. [kg]
gas	VQH	400 / 800	1371	1128	800	40	155	80	3	117	1719	18,5	247
temperatures:	VQH	400 / 1000	1571	1328	1000	40	155	80	4	117	1385	18,5	263
-25 up to +300 °C	VQH	400 / 1250	1821	1578	1250	40	155	80	5	142	1098	15	279
	VQH	400 / 1600	2171	1928	1600	40	155	80	7	117	859	11	303
	VQH	400 / 2000	2571	2328	2000	40	155	80	9	117	668	7,5	343
	VQH	400 / 2500	3071	2828	2500	40	155	80	11	167	525	5,5	383

Designs with higher motor power on request.

LTG High Performance Tangential Fans
Series VQN, VQH, Impeller Diameter 400 mm

Fan curves

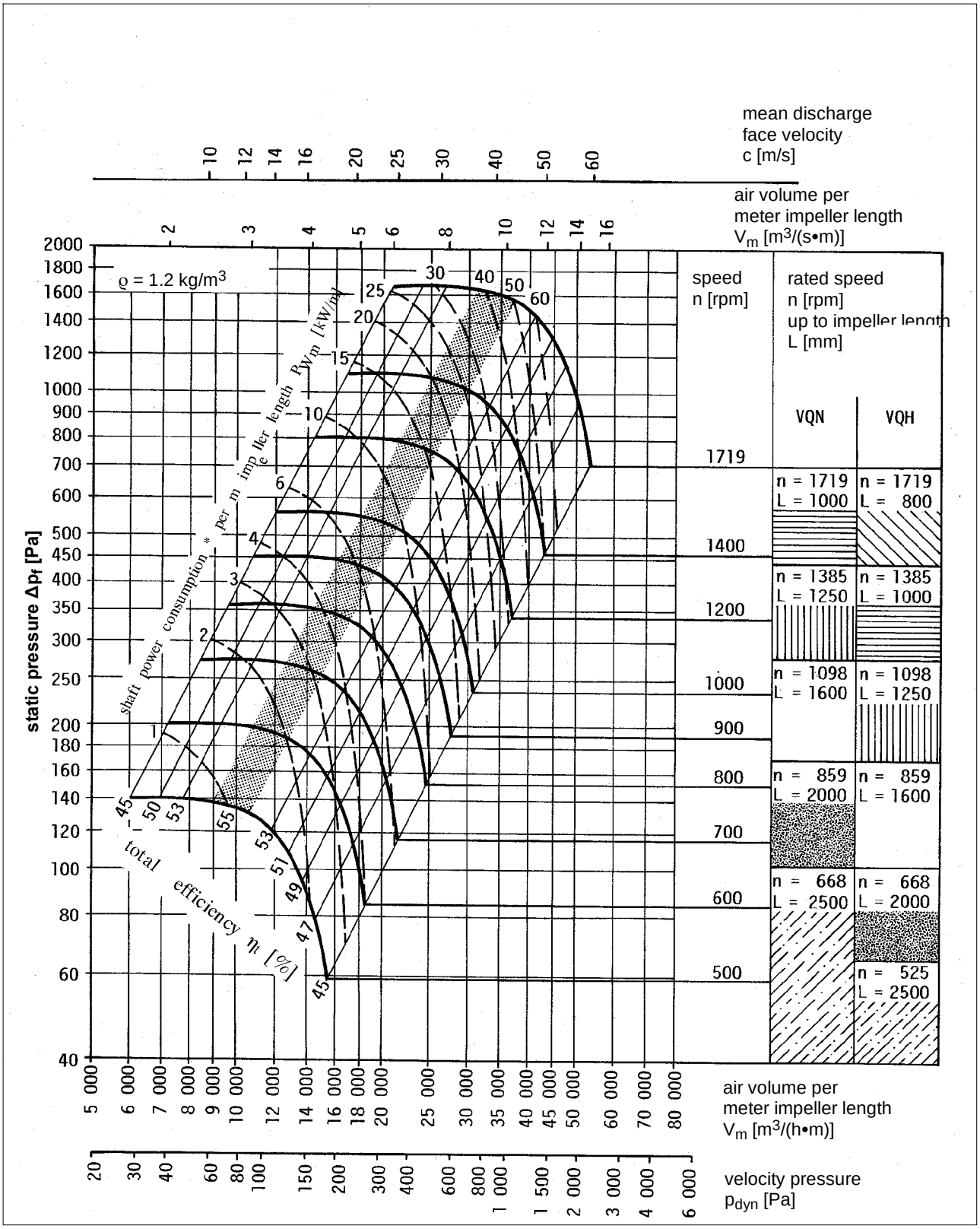

The shaft power consumption shown in this diagram does not include belt drive losses.

LTG High Performance Tangential Fans
Series VQN, VQH, Impeller Diameter 500 mm

Dimension sheets, technical data

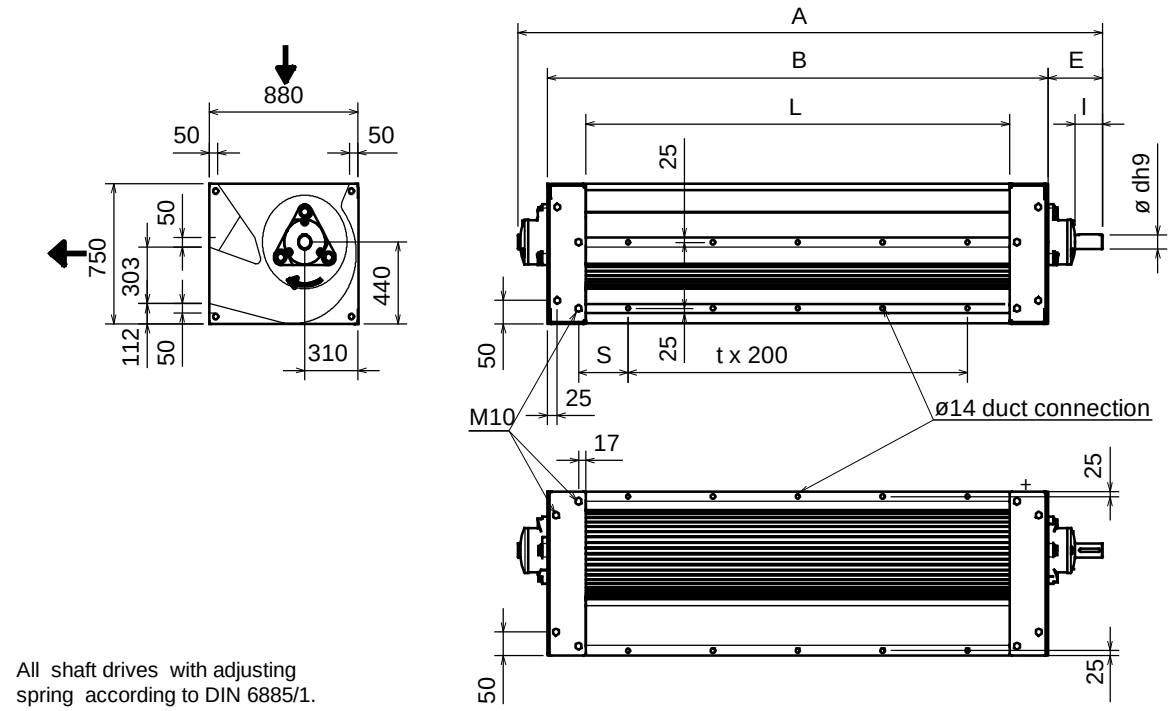

All shaft drives with adjusting spring according to DIN 6885/1.

Type VQN	Type	D/L	A [mm]	B [mm]	L [mm]	d [mm]	E [mm]	I [mm]	t	S [mm]	$n_{max.}$ [rpm]	P max. Motor [KW]	Weight approx. [kg]
gas	VQN	500 / 1000	1461	1226	1000	40	155	80	4	117	1375	18,5	318
temperatures:	VQN	500 / 1250	1711	1476	1250	40	155	80	5	142	1375	18,5	348
-25 up to +120 °C	VQN	500 / 1600	2061	1826	1600	40	155	80	7	117	1108	15	384
	VQN	500 / 2000	2461	2226	2000	40	155	80	9	117	879	11	428
	VQN	500 / 2500	2961	2726	2500	40	155	80	11	167	668	7,5	498
	VQN	500 / 3000	3461	3226	3000	40	155	80	14	217	535	5,5	538

Type VQH	Type	D/L	A [mm]	B [mm]	L [mm]	d [mm]	E [mm]	I [mm]	t	S [mm]	$n_{max.}$ [rpm]	P max. Motor [KW]	Weight approx. [kg]
gas	VQH	500 / 1000	1571	1336	1000	40	155	80	4	117	1375	18,5	343
temperatures:	VQH	500 / 1250	1821	1586	1250	40	155	80	5	142	1108	15	373
-25 up to +300 °C	VQH	500 / 1600	2171	1936	1600	40	155	80	7	117	879	11	409
	VQH	500 / 2000	2571	2336	2000	40	155	80	9	117	668	7,5	453
	VQH	500 / 2500	3071	2836	2500	40	155	80	11	167	535	5,5	523
	VQH	500 / 3000	3571	3336	3000	40	155	80	14	217	420	5,5	563

Designs with higher motor power on request.

LTG High Performance Tangential Fans
Series VQN, VQH, Impeller Diameter 500 mm

Fan curves

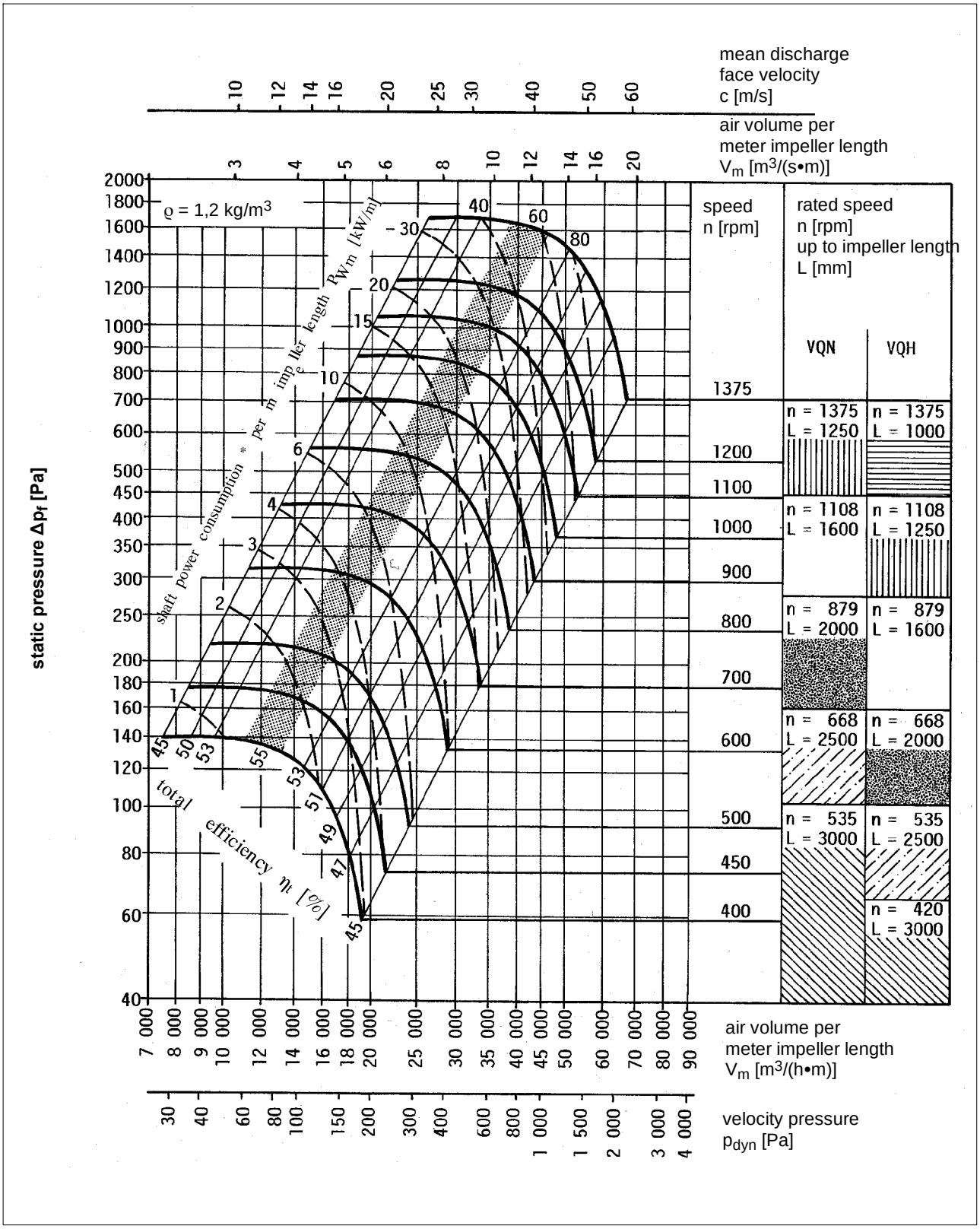

The shaft power consumption shown in this diagram does not include belt drive losses.

LTG High Performance Tangential Fans Series VQN, VQH

Installation, Operation

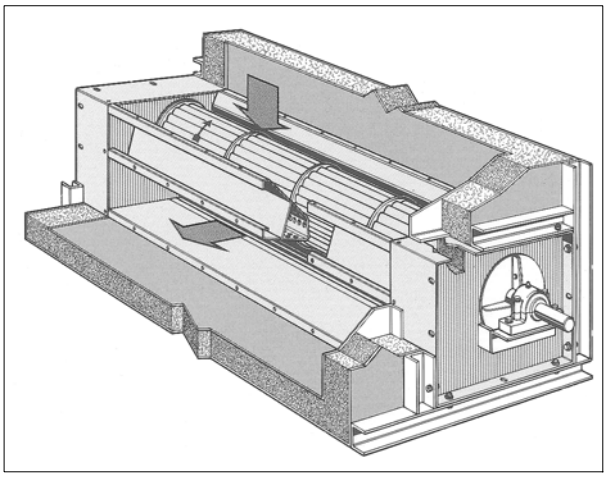

Installation example of type VQH and Typ VQT with on site insulation

The fan type VQH is provided with an insulating medium in the side boxes which may leak. Special leak proof versions are available on request.

Installation

Any arrangement is possible.

Fix the fan without any distortion to a plane base frame.

For fixation of the fan use only the bolt holes provided in the side elements.

For high temperature fans consider the thermal expansion of the housing. **Provide for a corresponding sliding room of the counter side element**.

With the suction opening on top, viewed against the discharge opening, the drive side bearing with shaft end can be had right hand or left hand.

It is necessary to provide an on site insulation of the side elements to not to exceed the max. ambient temperature of the bearings.

Operation

Make sure to observe the applicable safety codes before starting the fans.

High-temperature versions VQH and VQT are suitable for recirculated air operation only.

For higher service temperatures check temperature resistance and service life of the V-belts.

The smallest permissible pulley diameter is the next malen nominal fan diameter.

Before using multiple belt drives, use as large a pulley diameter as possibles.

The use of toothed belts is not permitted.

Always observe and verify the manufacturers' belt tension requirements.

The fans are designed for continous operation with constant load (operation mode SI analogous to VDE 0530).

For frequent start/stop operation please refer to LTG Aktiengesellschaft.

The fans have smooth shaft ends without key ways for use with elamping bushings (taper lock).

LTG High Performance Tangential Fans
Series VQN, VQH

Selection

Application			Example	Your Data
gas			hot air	
gas temperature	t	[°C]	+250	
ambient temperature drive side counter side	 t t	 [°C] [°C]	 +40 +40	
condensation			no	
located at			Tempering furnance	
drive side			right hand	
arrangement			horizontal	
Drive Motor				
power supply			3-phase	
voltage	U	[V]	220 / 380	
frequency	f	[Hz]	50	
Specified Performance				
air volume	V	[m^3/h]	17500	
static pressure	Δp_f	[Pa]	320	
at specific gravity	$\varrho_{20°C}$	[kg/m^3]	1.2	
active impeller length	L	[mm]	1250	
Procedure				
1. air volume	V	[m^3/h]	17500	
2. specific air volume V_m=V/L [m^3/h•m)] (per 1 m impeller length)			14000	
3. static pressure	Δp_f	[Pa]	320	
4. gas temperature	t	[°C]	+250	
Selected				
LTG Tangential Fan type	VQH 315/1250			
Performance Data for specific gravity $\varrho_{20°C}$ = 1.2 kg/m^3				
air volume	V	[m^3/h]	17500	
static pressure	Δp_f	[Pa]	310	
dynamic pressure	p_d	[Pa]	240	
total pressure	Δp_t	[Pa]	550	
exhaust velocity	c	[m/s]	20	
speed	n	[rpm]	1000	
max. rated speed	n_{max}	[rpm]	1091	
efficiency	η_t	[%]	54	
shaft power consumption (per 1 m impeller length)	P_{Wm}	[kW/m]	4	
shaft power consumption P_{Wm}•L	P_W	[kW]	5	
Acoustical Data				
$L_{W\ spez}$ spec. sound power level		[dB]	32	
L_1		[dB]	7	
L_2		[dB]	55	
sound power level	L_W	[dB]	94	
L_3		[dB]	4.5	
sound power level A-weighted	L_{WA}	[dBA]	89.5	
sound pressure level in the free field in 1 m distance (full spheric sound radiation)	L_{pA}	[dBA]	78.5	

Designations

V	[m^3/h]	air volume
Δp_f	[Pa]	static pressure
p_d	[Pa]	dynamic pressure at the discharge area
p_d	=	$r/2Sc^2$
Δpt	[Pa]	total pressure
c	[m/s]	velocity at the discharge area
ϱ	[kg/m^3]	specific gravity
n	[rpm]	speed
P_W	[kW]	shaft power consumption
L_W	[dB]	sound power level
L_{WA}	[dB(A)]	A-weighted sound power level
L_{pA}	[dB(A)]	A-weighted sound pressure level
s	[m^2]	panel area
h_t	[%]	efficiency

AIR TECH
SYSTEMS

Comfort Air Technology

Air Conditioning Systems

- Decentralized Facade Ventilation Units
- Fan Coil Units
- Induction Units,
  Active Chilled Beams

Air Diffusers

- Linear Air Diffusers
- Wall and Floor Mounted Air Diffusers
- Swirl Diffusers
- Industrial and Special Air Diffusers

Air Distribution

- Flow Rate and Pressure Controllers
- Shut-off and Balancing Dampers
- Silencers

Process Air Technology

Fans

- Tangential Fans
- Axial Fans
- Centrifugal Fans
- Fahrtwind-Simulators

Filtration Technology

- Suction Nozzles
- Dampers
- Filters, Dust Collectors
- Separators, Compactors

Humidification Technology

- Air Humidifiers
- Product Humidifiers

Engineering Services

Fluid Engineering

- Flow analysis
- Flow visualization
- CFD-simulations
- Flow optimization
- Air conditioning concepts

Thermodynamics

- Calorimetric performance measurement
- Thermal, dynamic, unsteady,
  system simulations

Acoustics

- Sound level measuring
- Vibration analysis
- Echo chamber measurement
- Acoustic optimization

Comfort

- Evaluation
- Optimization

Customer-specific Solutions

- Product development
- Process optimization
- Installation analysis

LTG Aktiengesellschaft
Grenzstraße 7
70435 Stuttgart
Germany
Tel.: +49 (711) 8201-0
Fax: +49 (711) 8201-696
E-Mail: info@LTG.net
www.LTG.net

LTG Incorporated
105 Corporate Drive, Suite E
Spartanburg, SC 29303
USA
Tel.: +1 (864) 599-6340
Fax: +1 (864) 599-6344
E-Mail: info@LTG-INC.net
www.LTG-INC.net

VQ-eng-TP (09/16) 450-20