AIR TECH
SYSTEMS

Technical Documentation

LTG High Performance Tangential Fans

Series TW

Impeller diameter from 125 to 200 mm

Content

LTG High Performance Tangential Fans- an advantage for best heating, cooling, drying, blasting

Many production processes require an extended linear and absolutely even distribution of air or other gases over a certain area.

The special design of, High Performance Tangential Fans provides the optimum solution for these requirements.

The robust design and the use of high quality materials assure a long life expectancy.

The way these fans work, allowing even air distribution without additional baffles and vanes, and the space-saving design, make the use of tangential fans very economic.

Flow principle

In a tangential fan, the air is drawn in over the entire length of the fan impeller. Inside the impeller, the airflow is diverted and accelerated by the vortex created by the rotation of the impeller.

The airstream then exists over the entire length of the impeller ① on the discharge side. The vortex ② separates the intake and discharge side of the fan at the narrowest point betwen the impeller and the vortex builder. Together with the fan scroll ③, the vortex directs the airflow. This results in an almost uniform laminar airflow over the entire outlet width of the fan.

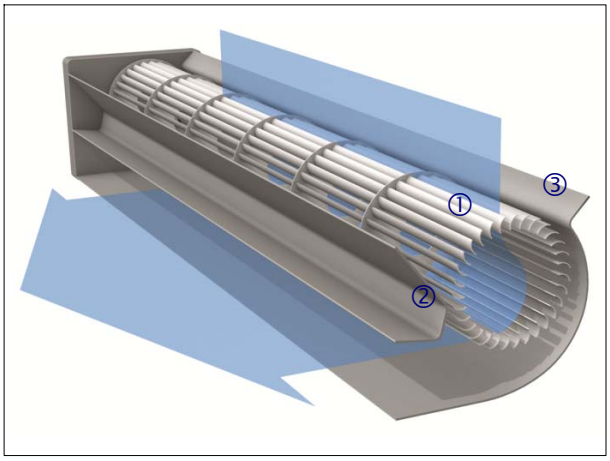

① impeller
② vortex inducer
③ fan scroll

Advantages

- Uniform, extended airflow over large areas.
- Space-saving installation due to 90° and 180° airflow pattern.
- Fan length can be matched exactly to machine width.
- Airflow conditions remain the same even for wider machines (simplified design and drafting in case of modular systems).
- Fans perform well in any mounting position. Drive can be mounted on right or left hand side.
- Quiet operation due to optimised impeller and housing design.
- Long live expectancy due to robust design and location of bearings outside the hot air zone.
- Explosion-proof models according to ATEX available.

Application of LTG High Performance Tangential Fans

- Agricultural technology
- air-conditioning technology
- apparatus engineering
- automotive industry
- bakery technology
- biomedical industry
- building material industry
- chemical industry
- cleaning technology
- control panel technology
- dedusting technology
- drying technology
- electronic industry
- environmental simulations
- food industry
- furnace technology
- heat treatment technology
- mechanical and plant engineering
- medical technology
- packaging industry
- paper industry
- pharmaceutical industry
- power plant engineering
- process engineering
- railway technology
- refrigeration technology
- store design
- surface technology
- swimming pool technology
- textile machinery design
- tobacco industry
- transportation cooling
- wood industry
- ...

LTG High Performance Tangential Fans
Series TW, impeller diameter 125 mm

The tangential fan series TW 125 is a rigid industrial grade fan with enhanced corrosion protection and high power density.

LTG Tangential Fan type TWL 125
(left hand drive)

Service conditions

gas temperatures:
-13 °F up to +248 °F (-25 °C bis max. +120 °C)
ambient temperatures:
-13 °F up to +104 °F (-25 °C bis max. +40 °C)

Specification and design features

Tangential fan with shaft end on the drive side.

Rigid bolted, corrosion proof casing of marine grade aluminium (DIN 1725). Impeller of galvanized steel.

The impeller is both sides bedded in self-aligning ball bearings. Bearing design life is 25 000 hours. The counter side bearing is mounted vibration dampened. Both bearings are lifetime lubricated.

Recommended V-belt pulley:
dw = 125 mm (4.9 in), profile SPA 12,5 mm (0.49 inch), DIN 7753.
The maximum rated power transmission for the pulley is 4 kW (5.36 hp).
Intake and discharge openings have sealing planes and plug in slots to connect exactly to ducts and appliances. The complete fan (including bearing clearance etc.) is balanced to grade Q 6.3 according to VDI 2060.

Length tolerances acc. to ISO 2768 vL.

Delivery range series TW, impeller diameter 125 mm

type	max. medium temperatures	impeller length	casing	impeller
TWR 125/400/N TWL 125/400/N	-25 °C to +120 °C (-13 °F to +248 °F)	400 mm (15.75 inch)	stainless steel aluminium	galvanized steel
TWR 125/600/N TWL 125/600/N		600 mm (23.62 inch)		
TWR 125/800/N TWL 125/800/N		800 mm (31.50 inch)		
TWR 125/1000/N TWL 125/1000/N		1000 mm (39.37 inch)		

TWR = right hand drive
TWL = left hand drive

LTG High Performance Tangential Fans
Series TW, impeller diameter 125 mm

Position of the fan

Any arrangement is possible.

Installation and start up

Fix the fans without any distortion to a plane base frame. For fixation of the fan use only the bolt holes provided in the side elements.

To connect to ducts and appliances plug in slots and sealing planes are provided over the whole fan width for the intake and discharge openings.

Make sure to observe the applicable safety codes before starting the fans.

Check V-belt selection for higher temperature applications.

The fans are designed for continuous operation with constant load (operation mode S1 analogous to VDE 0530). For frequent start/stop operation please check with LTG.

Dimensions and performance data

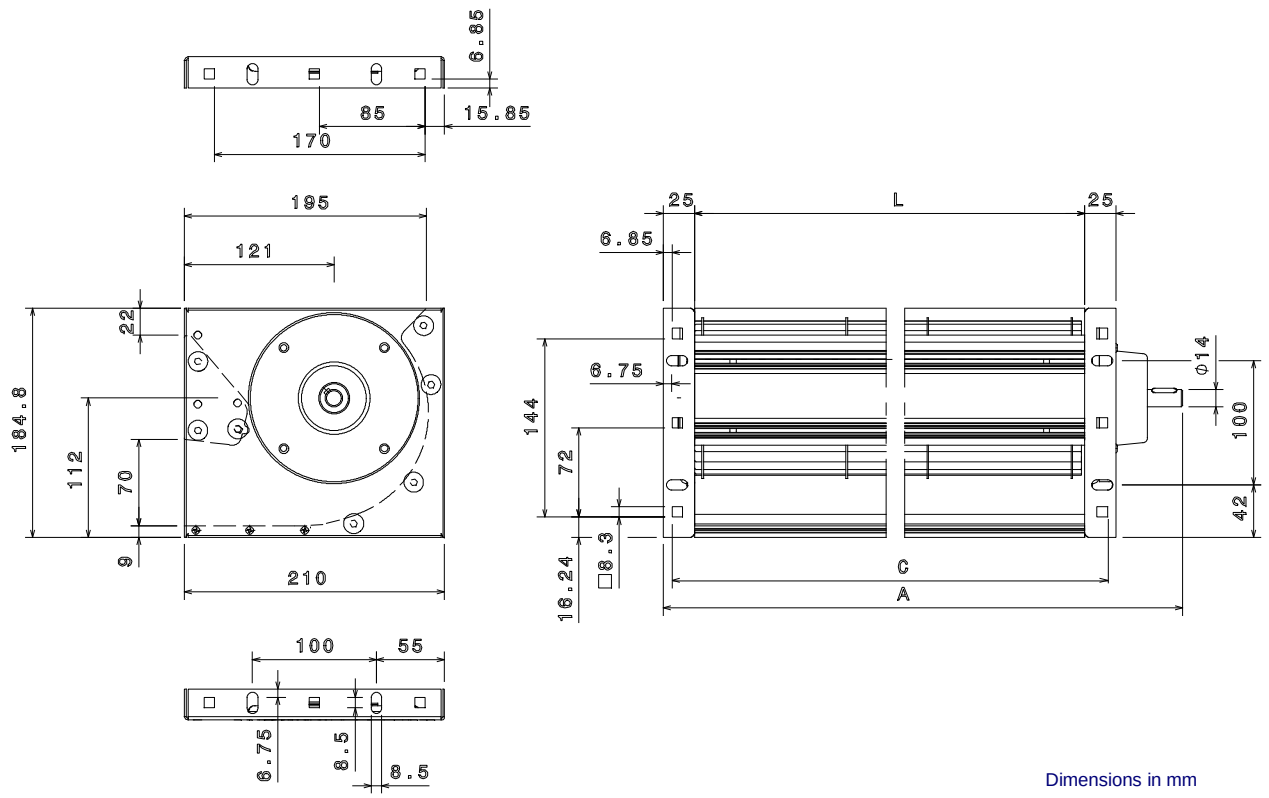

type/ nominal length	dimensions L [mm] [inch]	A [mm] [inch]	C [mm] [inch]	air volume V_{max} [m³/h] [cfm]	pressure Δp_{fmax} [Pa] [" wg]	speed n_{max} [rpm] [rpm]	masses appr. [kg] [lb]
TWR 125/400/N TWL 125/400/N	400 15.75	504 19.85	436 17.16	3900 2296	500 2.1	3515	8 17.6
TWR 125/600/N TWL 125/600/N	600 23.62	704 27.72	636 25	4800 2825	220 0.89	2920	10.5 23.15
TWR 125/800/N TWL 125/800/N	800 31.5	904 35.6	836 32.9	3750 2207	117 0.47	1680	13 28.66
TWR 125/1000/N TWL 125/1000/N	1000 39.37	1104 43.46	1036 40.78	3800 2237	80 0.32	1390	15,5 34.17

LTG High Performance Tangential Fans
Series TW, impeller diameter 125 mm

Plug in slots

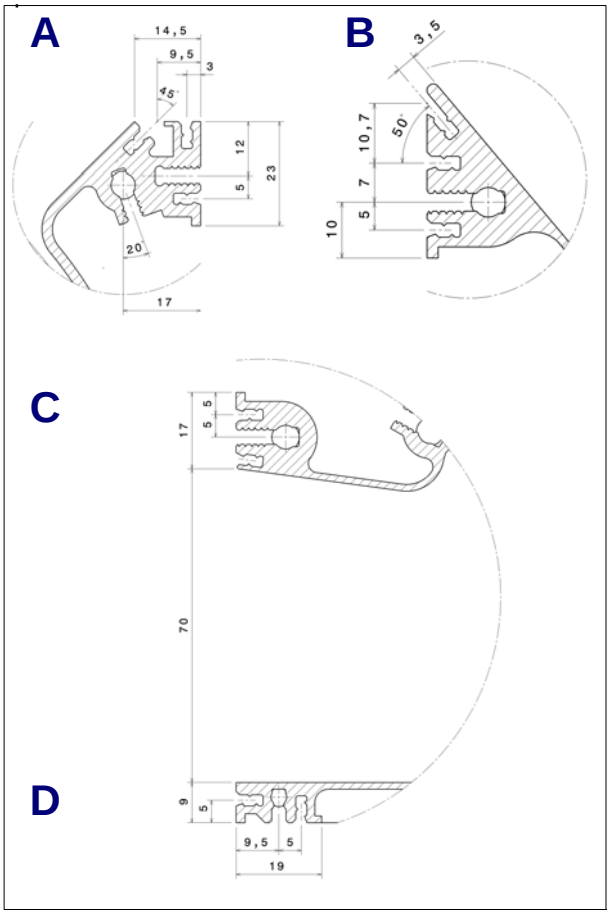

Plug in slots over the full fan width

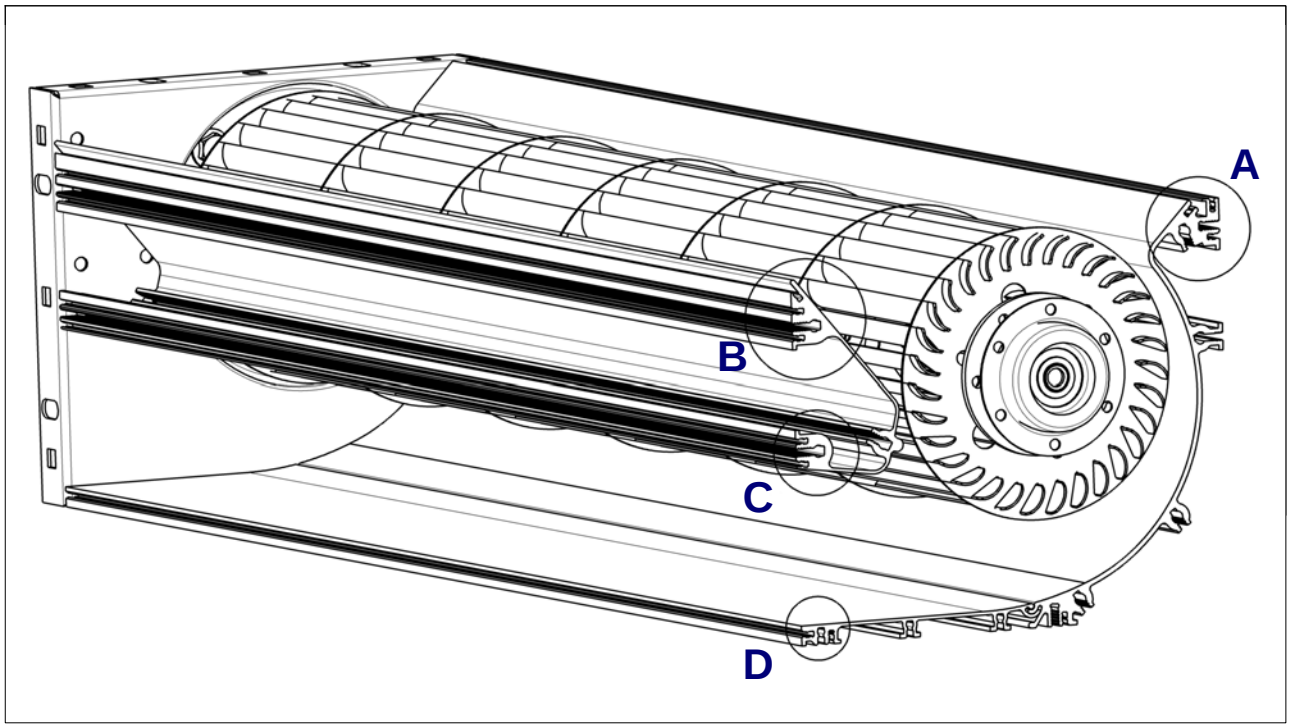

LTG High Performance Tangential Fans
Series TW, impeller diameter 125mm

Fan curves for nominal length 400 mm (15.75 inch)

The indicated shaft power consumption does **not** include the loss in the belt drive

Test conditions for the fan curves

The indicated curves are valid for an air density of ρ =0.075 lb/ft³ (1.2 kg/m³). The rating tests where done as laboratory test according to EN ISO 5801:2008 with unrestricted inlet and discharge. Fans with a drive power > 4.0 hp (3.0 kW) must be smoothly started.

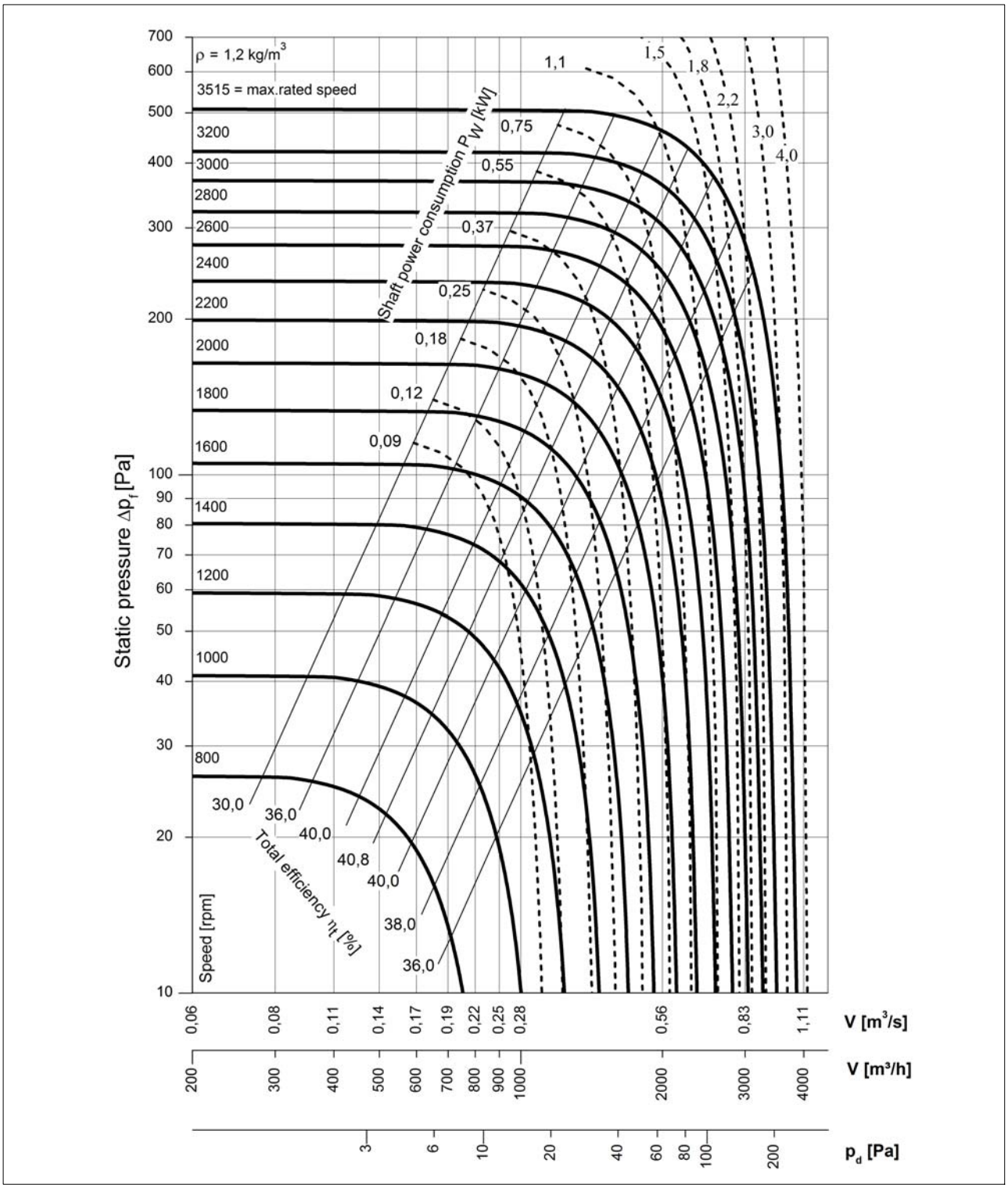

LTG High Performance Tangential Fans
Series TW, impeller diameter 125 mm

Fan curves for nominal length 600 mm (23.62 inch)

The indicated shaft power consumption does **not** include the loss in the belt drive

Test conditions for the fan curves

The indicated curves are valid for an air density of ρ =0.075 lb/ft³ (1.2 kg/m³). The rating tests where done as laboratory test according to EN ISO 5801:2008 with unrestricted inlet and discharge. Fans with a drive power > 4.0 hp (3.0 kW) must be smoothly started.

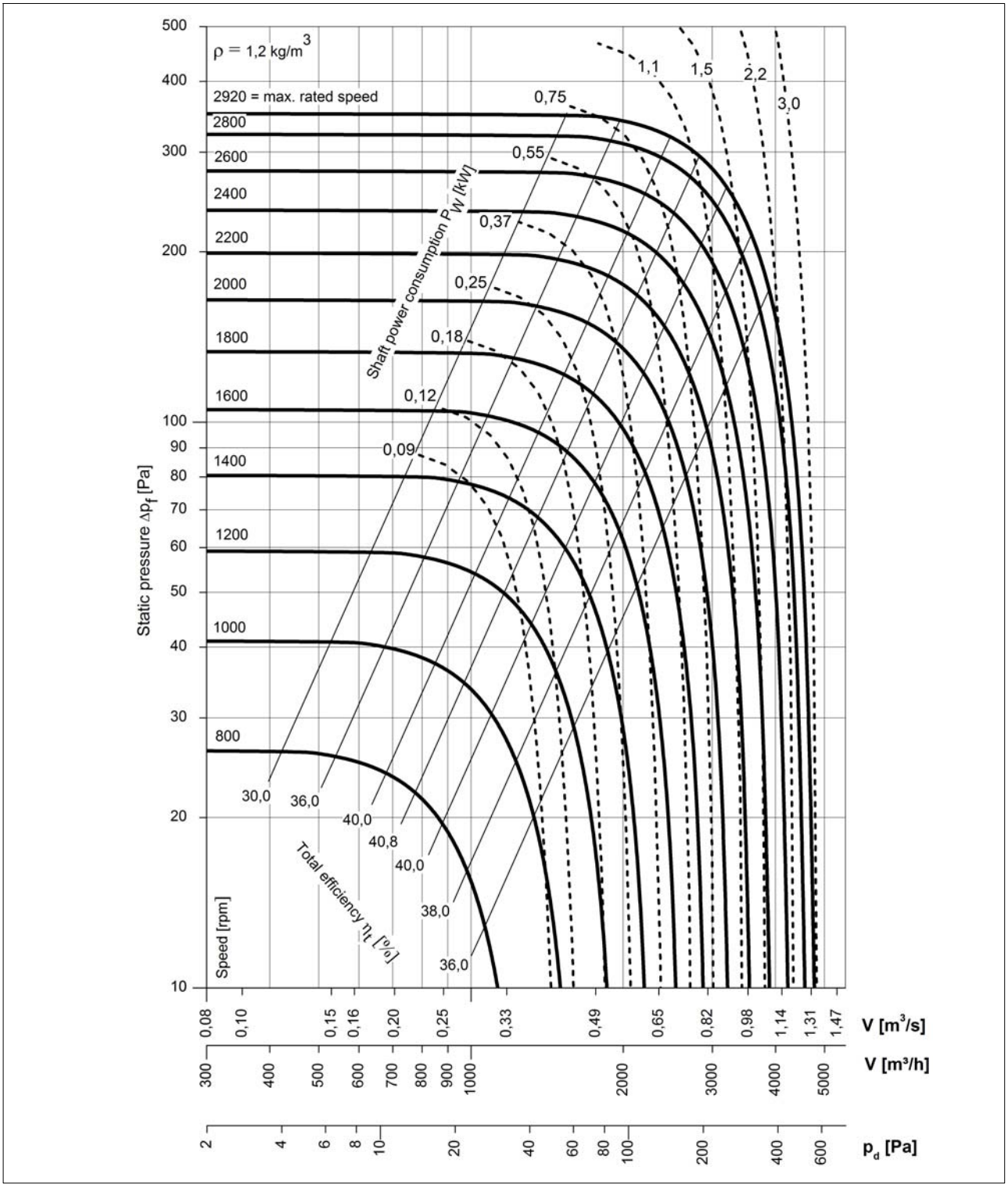

LTG High Performance Tangential Fans
Series TW, impeller diameter 125 mm

Fan curves for nominal length 800 mm(31.50 inch)

The indicated shaft power consumption does **not** include the loss in the belt drive

Test conditions for the fan curves

The indicated curves are valid for an air density of ρ =0.075 lb/ft³ (1.2 kg/m^3). The rating tests where done as laboratory test according to EN ISO 5801:2008 with unrestricted inlet and discharge. Fans with a drive power > 4.0 hp (3.0 kW) must be smoothly started.

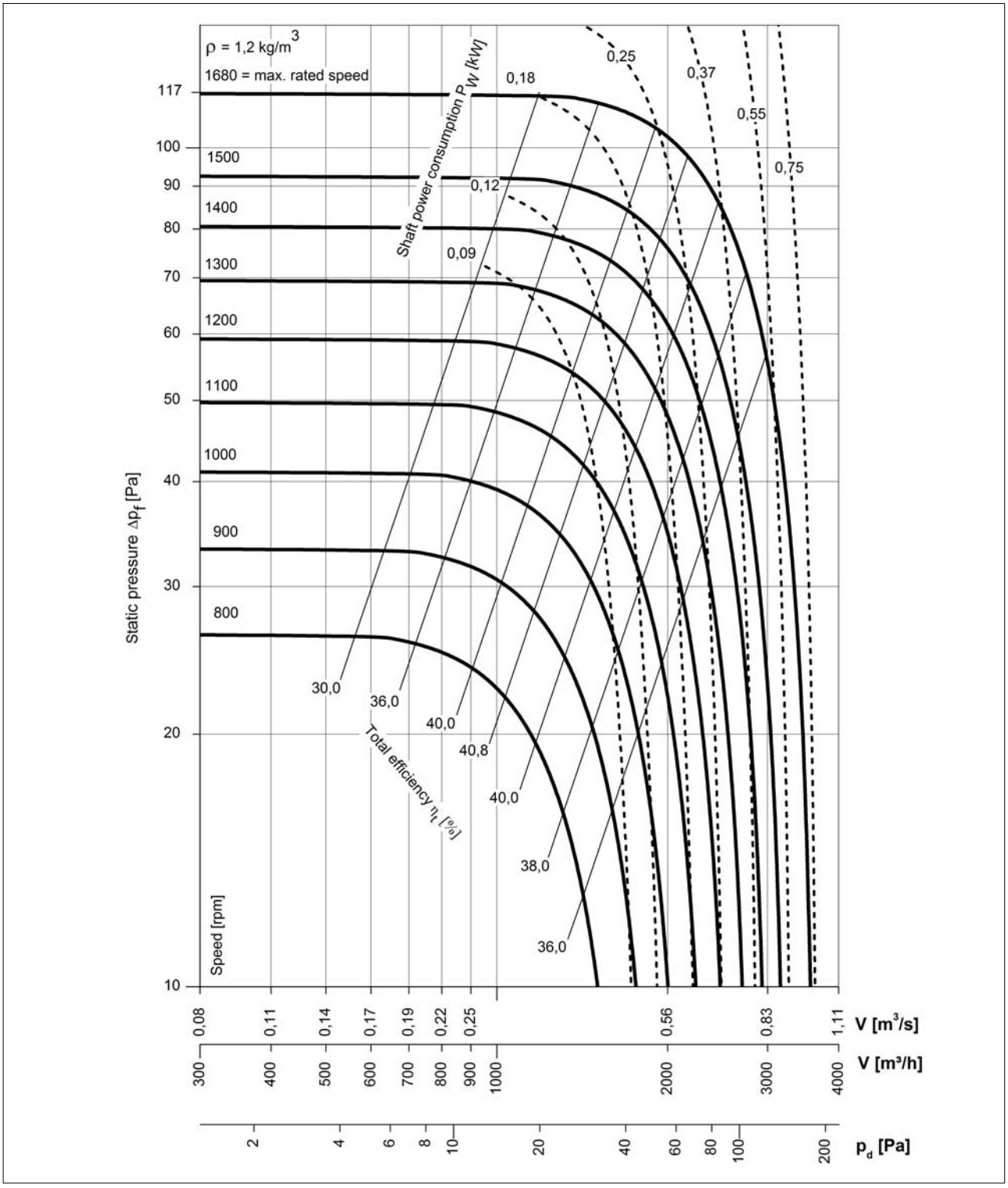

LTG High Performance Tangential Fans
Series TW, impeller diameter 125 mm

Fan curves for nominal length 1000 mm (39.37 inch)

The indicated shaft power consumption does **not** include the loss in the belt drive

Test conditions for the fan curves

The indicated curves are valid for an air density of ρ =0.075 lb/ft³ (1.2 kg/m³). The rating tests where done as laboratory test according to EN ISO 5801:2008 with unrestricted inlet and discharge. Fans with a drive power > 4.0 hp (3.0 kW) must be smoothly started.

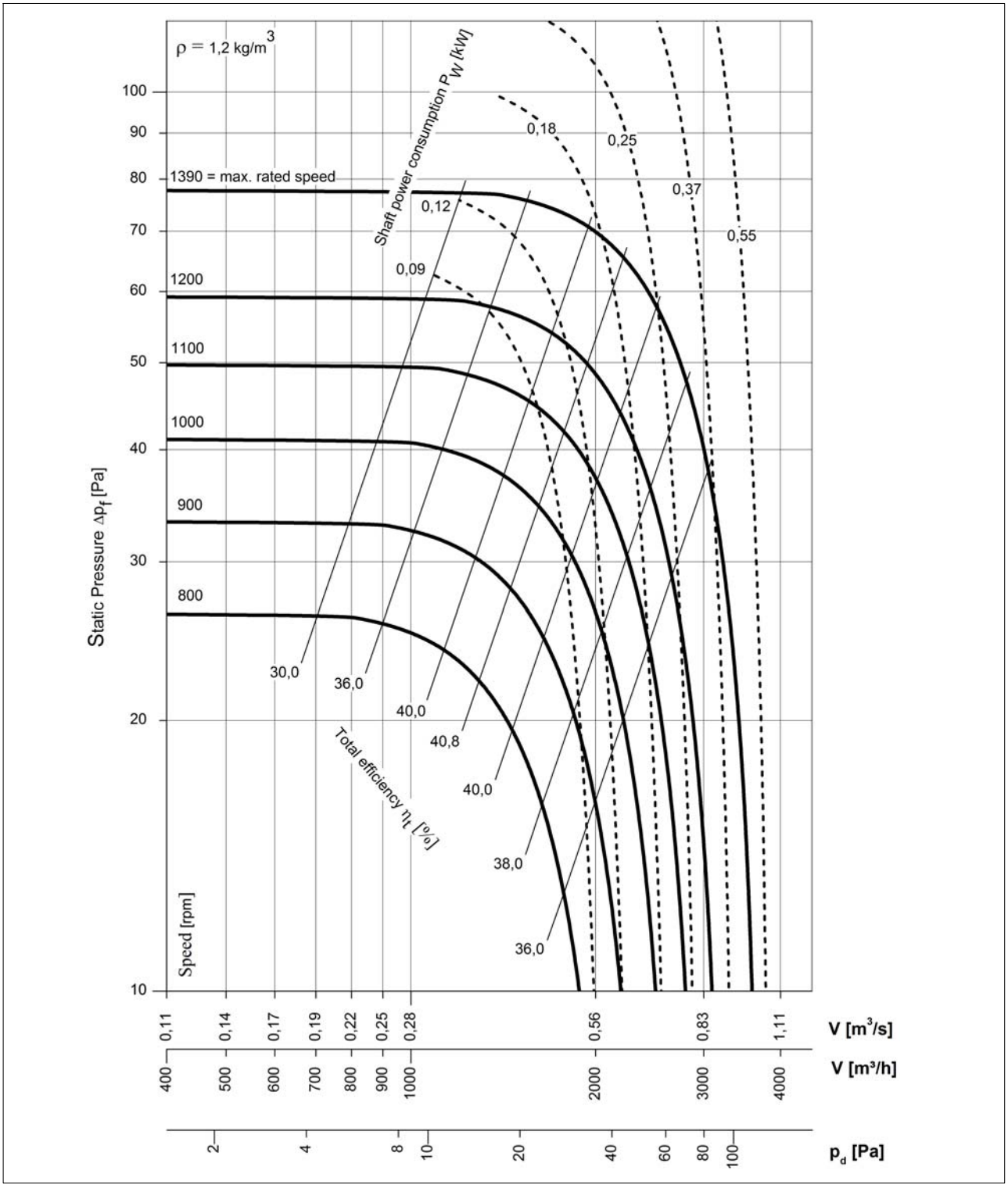

LTG High Performance Tangential Fans
Series TW, impeller diameter 150 mm

The tangential fan series TW 150 is a rigid industrial grade fan with enhanced corrosion protection and high power density.

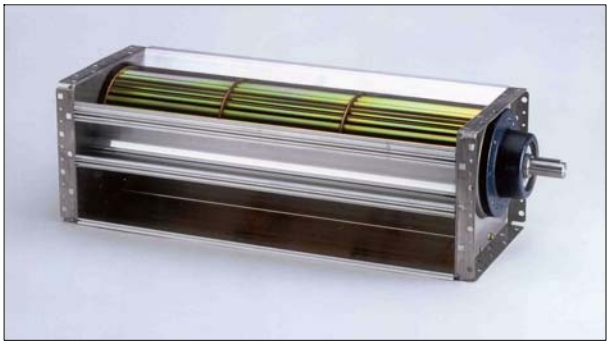

LTG Tangential Fan type TWR 150
(right hand drive)

Service conditions

gas temperatures:
-13 °F up to +248 °F (-25 °C bis max. +120 °C)
ambient temperatures:
-13 °F up to +104 °F (-25 °C bis max. +40 °C)

Specification and design features

Tangential fan with shaft end on the drive side.

Rigid bolted, corrosion proof casing of marine grade aluminium (DIN 1725). Impeller of galvanized steel.

The impeller is both sides bedded in self-aligning ball bearings. Bearing design life is 25 000 hours. The counter side bearing is mounted vibration dampened. Both bearings are lifetime lubricated.

Recommended V-belt pulley:
profile SPA 12.5 mm (0.49 inch), dw = 160 mm (6.3 inch). DIN 7753.
The maximum rated power transmission for the pulley is 9 kW (12 hp).
Intake and discharge openings have sealing planes and plug in slots to connect exactly to ducts and appliances. The complete fan (including bearing clearance etc.) is balanced to grade Q 6.3 according to VDI 2060.

Length tolerances acc. to ISO 2768 vL.

Delivery Range Series TW, impeller diameter 150 mm

type	max. medium temperatures	impeller length	casing	impeller
TWR 150/401/N TWL 150/401/N	-25 °C to +120 °C (-13 °F to +248 °F)	401 mm (15.79 inch)	marine grade aluminium	galvanized steel
TWR 150/601/N TWL 150/601/N		601 mm (23.66 inch)		
TWR 150/864/N TWL 150/864/N		864 mm (34.02 inch)		
TWR 150/1064/N TWL 150/1064/N		1064 mm (41.89 inch)		
TWR 150/1264/N TWL 150/1264/N		1264 mm (49.76 inch)		
TWR 150/1464/N TWL 150/1464/N		1464 mm (57.64 inch)		

TWR = right hand drive
TWL = left hand drive

LTG High Performance Tangential Fans
Series TW, impeller diameter 150 mm

Position of the fan

Any arrangement is possible.

Installation and start up

Fix the fans without any distortion to a plane base frame. For fixation of the fan use only the bolt holes provided in the side elements.

To connect to ducts and appliances plug in slots and sealing planes are provided over the whole fan width for the intake and discharge openings.

Make sure to observe the applicable safety codes before starting the fans.

Check V-belt selection for higher temperature applications.

The fans are designed for continuous operation with constant load (operation mode S1 analogous to VDE 0530): For frequent start/stop operation please check with LTG.

Dimensions and performance data

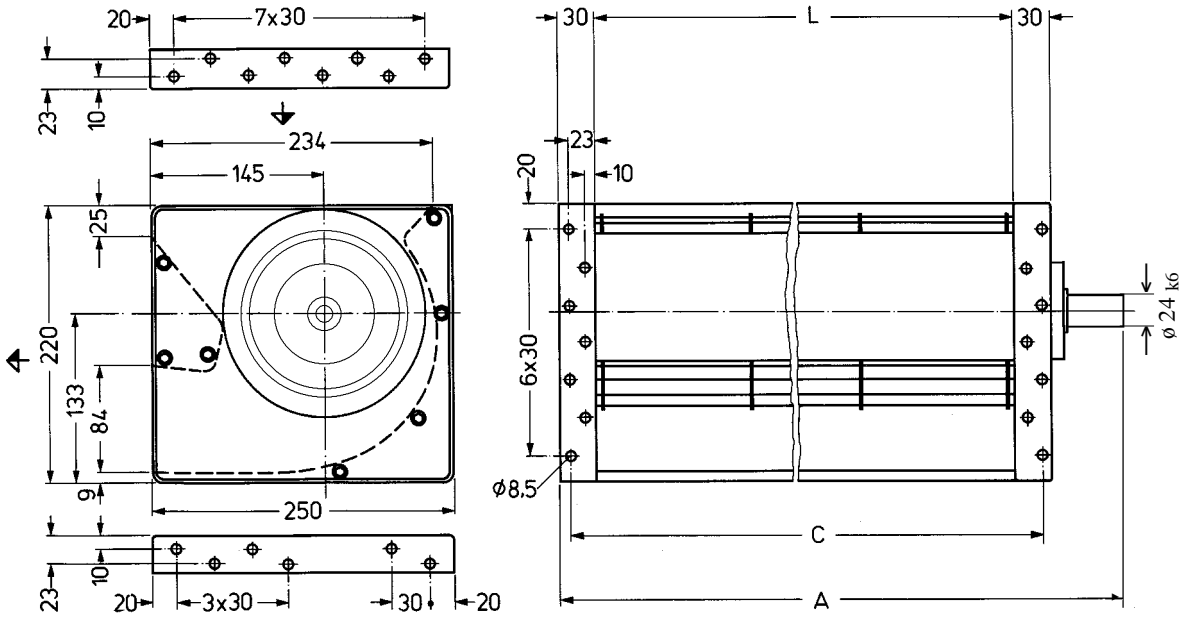

Dimensions in mm

type/ nominal length	dimensions L [mm] [inch]	A [mm] [inch]	C [mm] [inch]	air-volume V_{max} [m³/h] [cfm]	pressure Δp_{fmax} [Pa] [" wg]	speed n_{max} [rpm]	masses appr. [kg] [lb]
TWR 150/401/N TWL 150/401/N	401 15.79	547 21.54	447 17.60	6200 3650	600 2.4	2800	10 22
TWR 150/601/N TWL 150/601/N	601 23.66	747 29.41	647 25.47	8800 5180	600 2.4	2800	13 29
TWR 150/864/N TWL 150/864/N	864 34.02	1010 39.76	910 35.83	12000 7063	510 2	2600	16 36
TWR 150/1064/N TWL 150/1064/N	1064 41.89	1210 47.64	1110 43.70	14000 8240	430 1.7	2400	19 42
TWR 150/1264/N TWL 150/1264/N	1264 49.76	1410 55.51	1310 51.57	12000 7063	240 1	1800	22 49
TWR 150/1464/N TWL 150/1464/N	1464 57.64	1610 63.39	1510 59.45	11000 6475	155 3.2	1440	25 55

LTG High Performance Tangential Fans
Series TW, impeller diameter 150 mm

Plug in slots

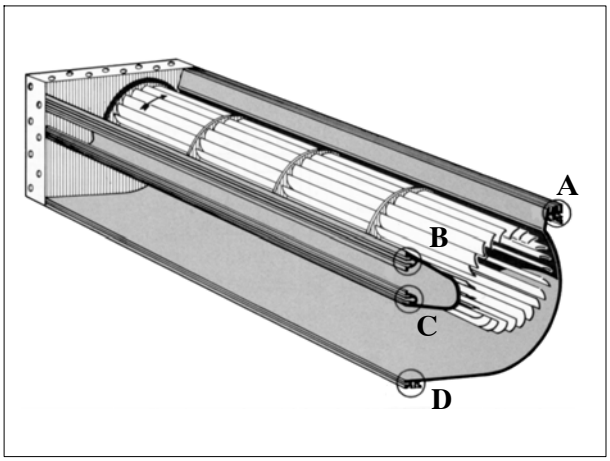

Plug in slots over the full fan width

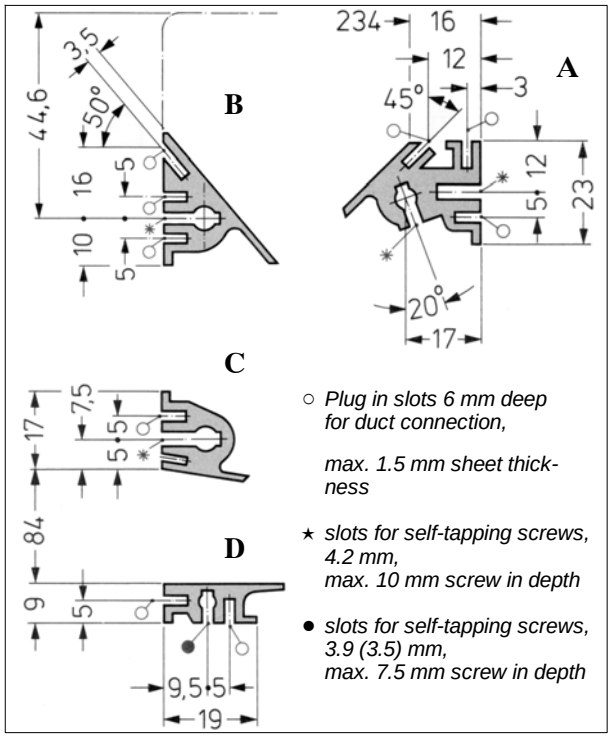

LTG High Performance Tangential Fans
Series TW, impeller diameter 150mm

Fan curves for nominal length 401 mm (15.79 inch)

The indicated shaft power consumption does **not** include the loss in the belt drive

Test conditions for the fan curves

The indicated curves are valid for an air density of ϱ =0.075 lb/ft³ (1.2 kg/m³). The rating tests where done as laboratory test according to EN ISO 5801:2008 with unrestricted inlet and discharge. Fans with a drive power > 4.0 hp (3.0 kW) must be smoothly started.

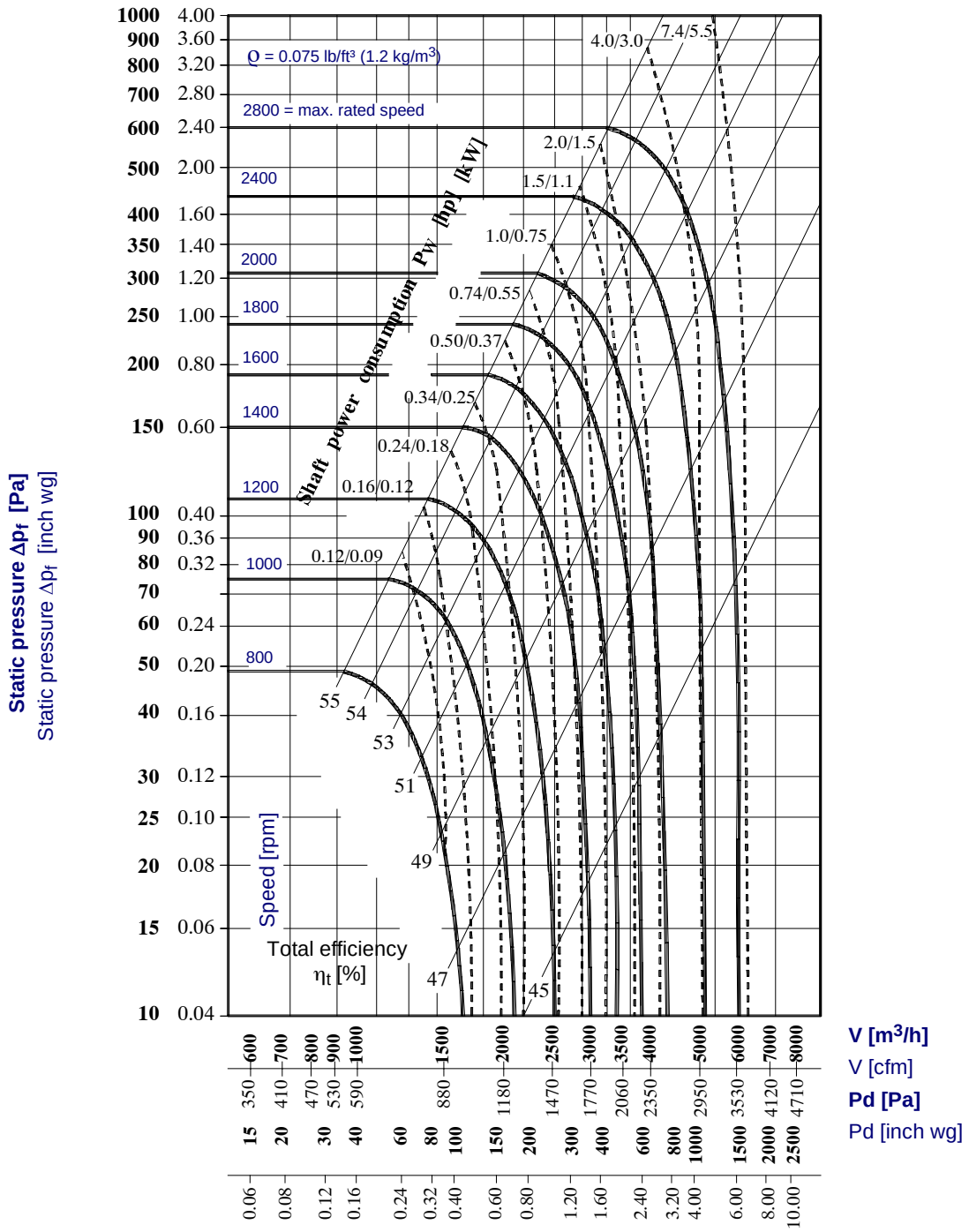

LTG High Performance Tangential Fans
Series TW, impeller diameter 150 mm

Fan curves for nominal length 601 mm (23.66 inch)

The indicated shaft power consumption does **not** include the loss in the belt drive

Test conditions for the fan curves

The indicated curves are valid for an air density of ϱ =0.075 lb/ft³ (1.2 kg/m³). The rating tests where done as laboratory test according to EN ISO 5801:2008 with unrestricted inlet and discharge. Fans with a drive power > 4.0 hp (3.0 kW) must be smoothly started.

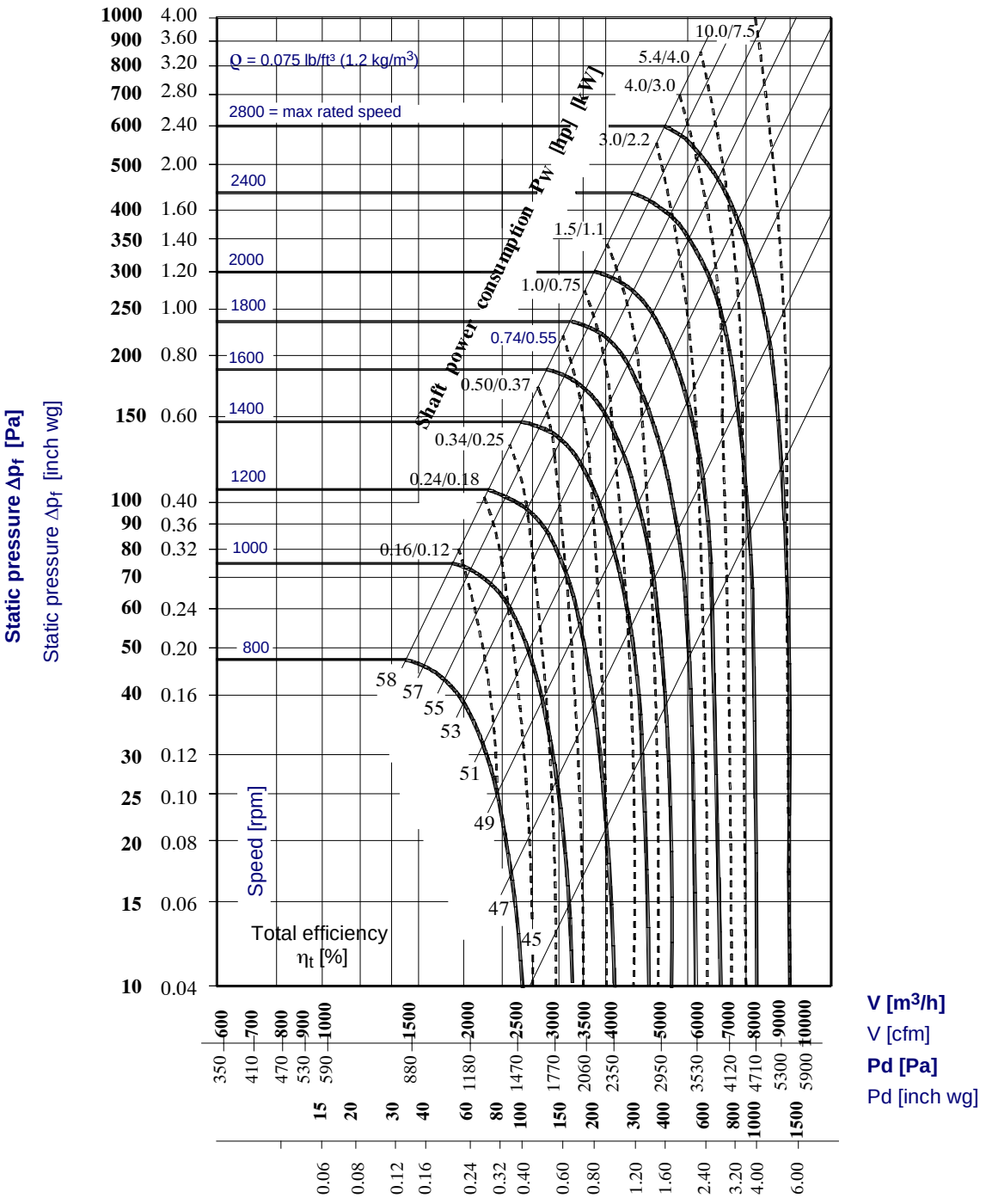

LTG High Performance Tangential Fans
Series TW, impeller diameter 150 mm

Fan curves for nominal length 864 mm (34.02 inch)

The indicated shaft power consumption does **not** include the loss in the belt drive

Test conditions for the fan curves

The indicated curves are valid for an air density of ϱ =0.075 lb/ft³ (1.2 kg/m³). The rating tests where done as laboratory test according to EN ISO 5801:2008 with unrestricted inlet and discharge. Fans with a drive power > 4.0 hp (3.0 kW) must be smoothly started.

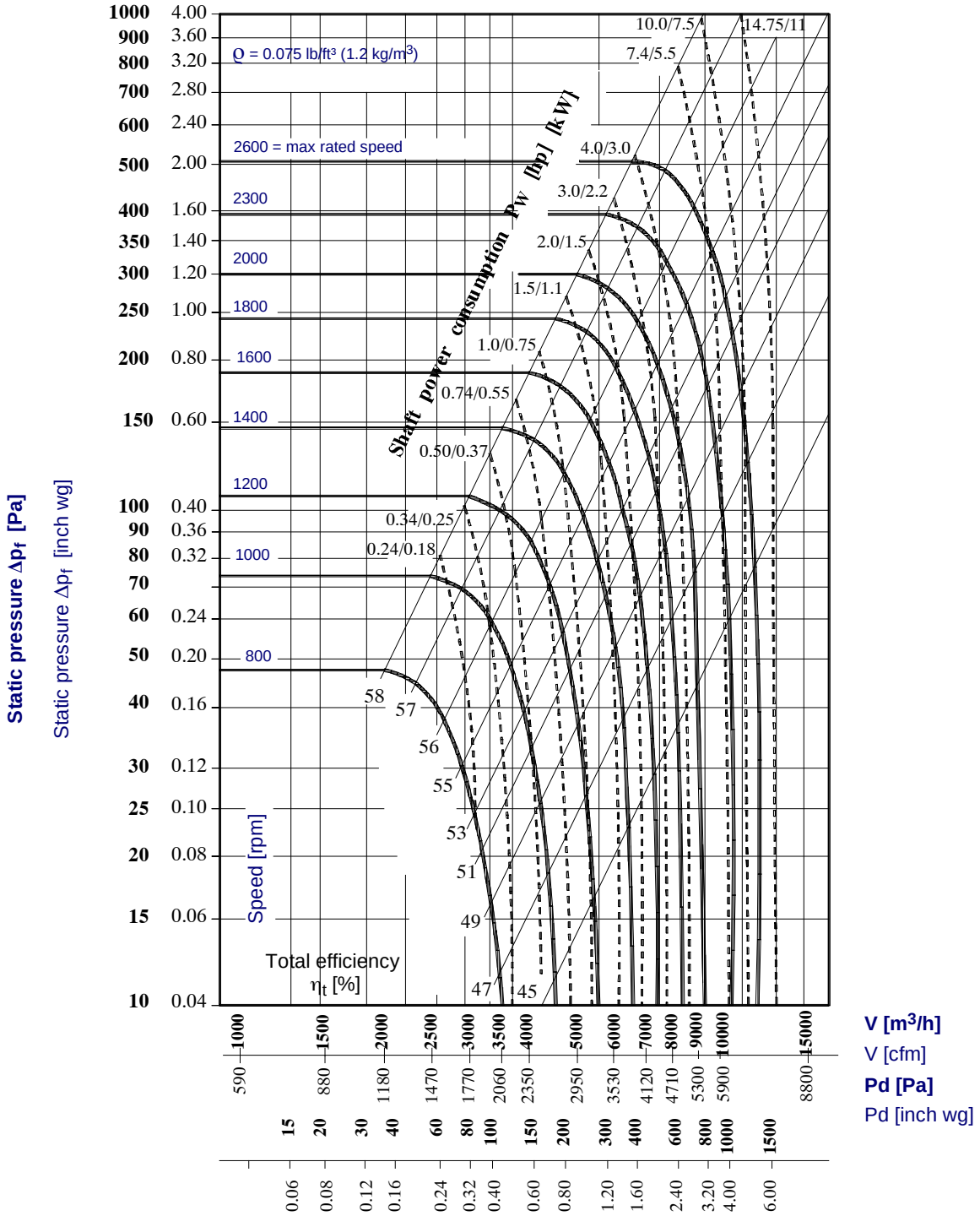

LTG High Performance Tangential Fans
Series TW, impeller diameter 150 mm

Fan curves for nominal length 1064 mm (41.89 inch)

The indicated shaft power consumption does **not** include the loss in the belt drive

Test conditions for the fan curves

The indicated curves are valid for an air density of ϱ =0.075 lb/ft³ (1.2 kg/m³). The rating tests where done as laboratory test according to EN ISO 5801:2008 with unrestricted inlet and discharge. Fans with a drive power > 4.0 hp (3.0 kW) must be smoothly started.

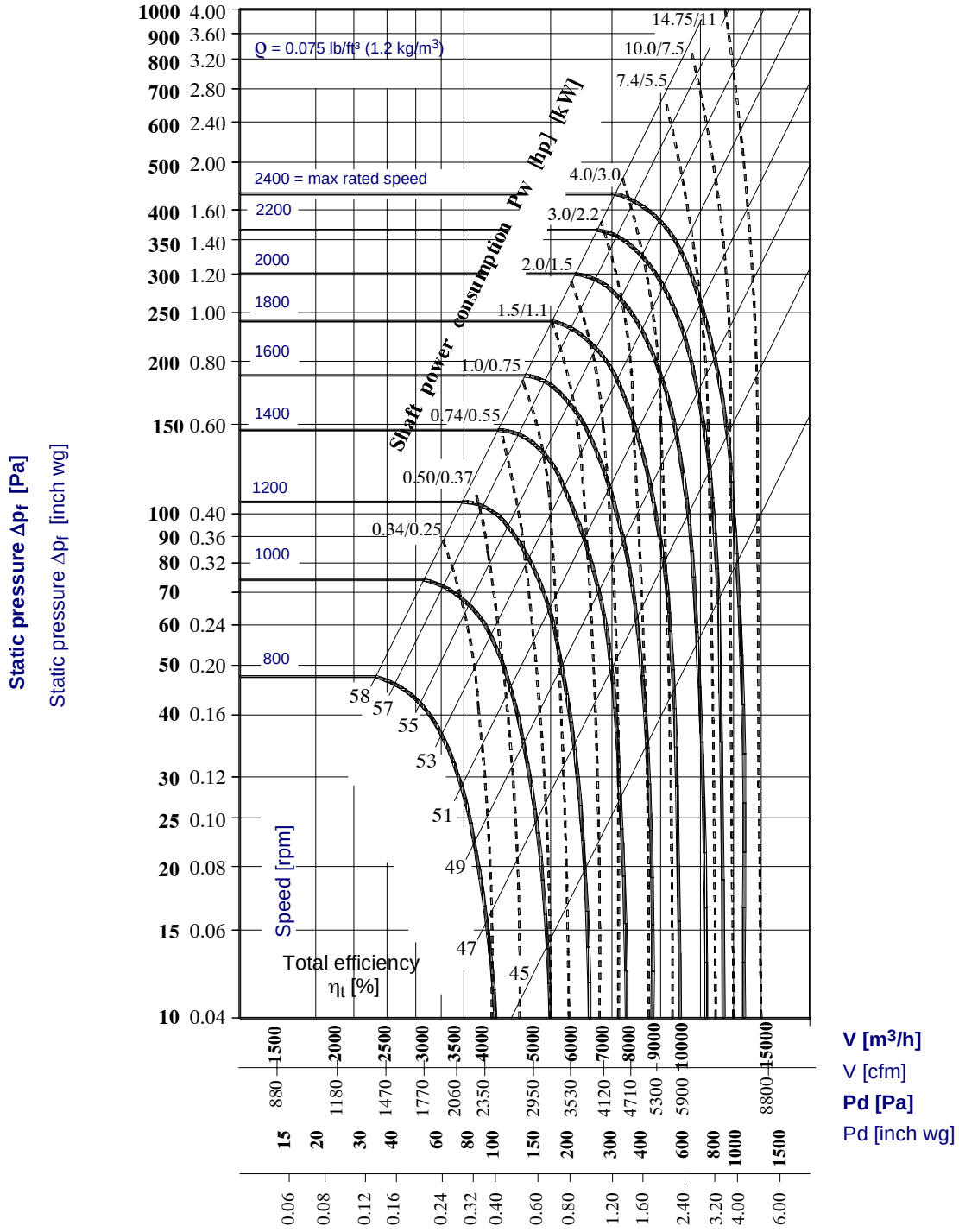

LTG High Performance Tangential Fans
Series TW, impeller diameter 150 mm

Fan curves for nominal length 1264 mm (49.76 inch)

The indicated shaft power consumption does **not** include the loss in the belt drive

Test conditions for the fan curves

The indicated curves are valid for an air density of ϱ =0.075 lb/ft³ (1.2 kg/m³). The rating tests where done as laboratory test according to EN ISO 5801:2008 with unrestricted inlet and discharge. Fans with a drive power > 4.0 hp (3.0 kW) must be smoothly started.

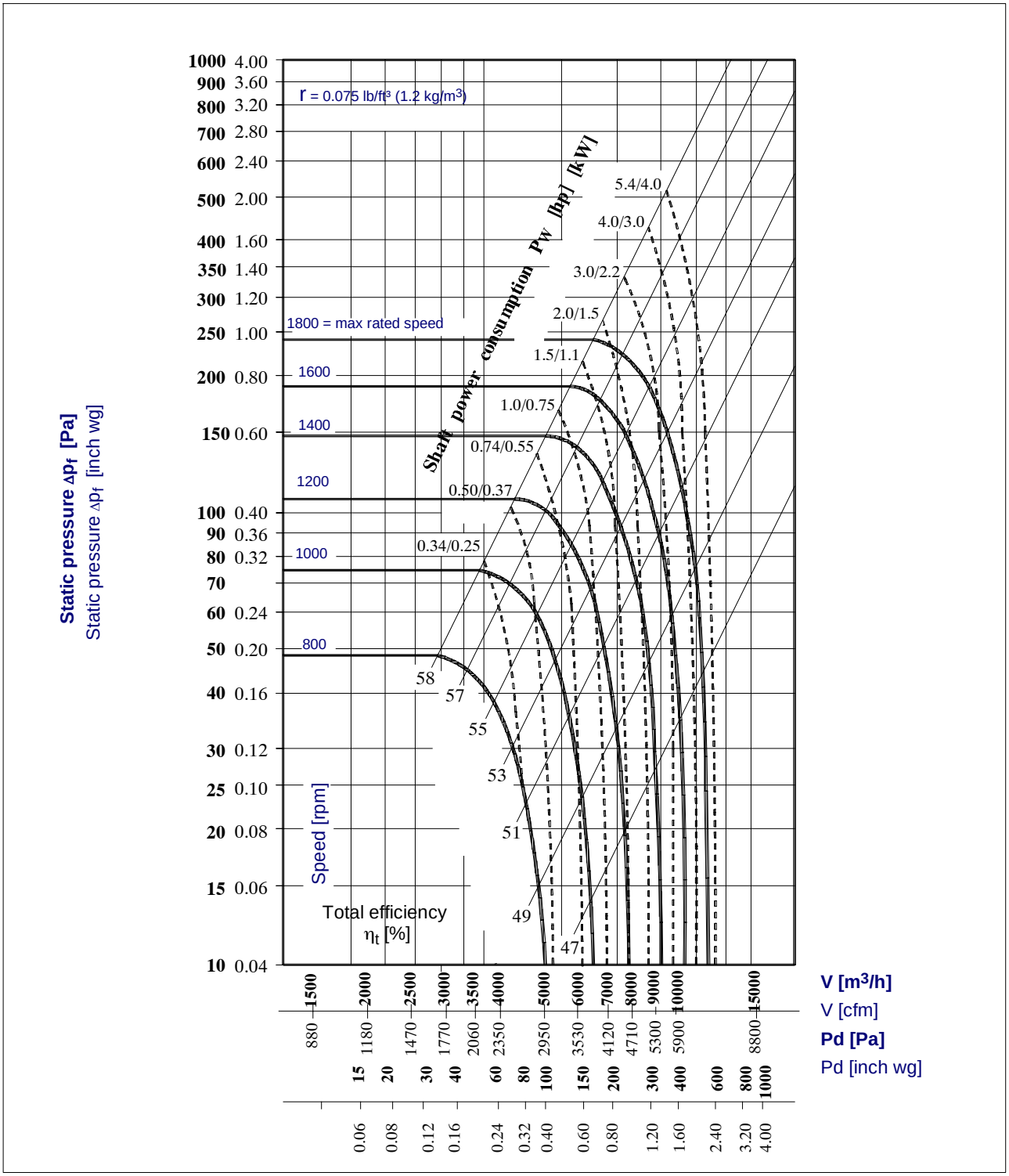

LTG High Performance Tangential Fans
Series TW, impeller diameter 150 mm

Fan curves for nominal length 1464 mm (49.76 inch)

The indicated shaft power consumption does **not** include the loss in the belt drive

Test conditions for the fan curves

The indicated curves are valid for an air density of ρ =0.075 lb/ft³ (1.2 kg/m³). The rating tests where done as laboratory test according to EN ISO 5801:2008 with unrestricted inlet and discharge. Fans with a drive power > 4.0 hp (3.0 kW) must be smoothly started.

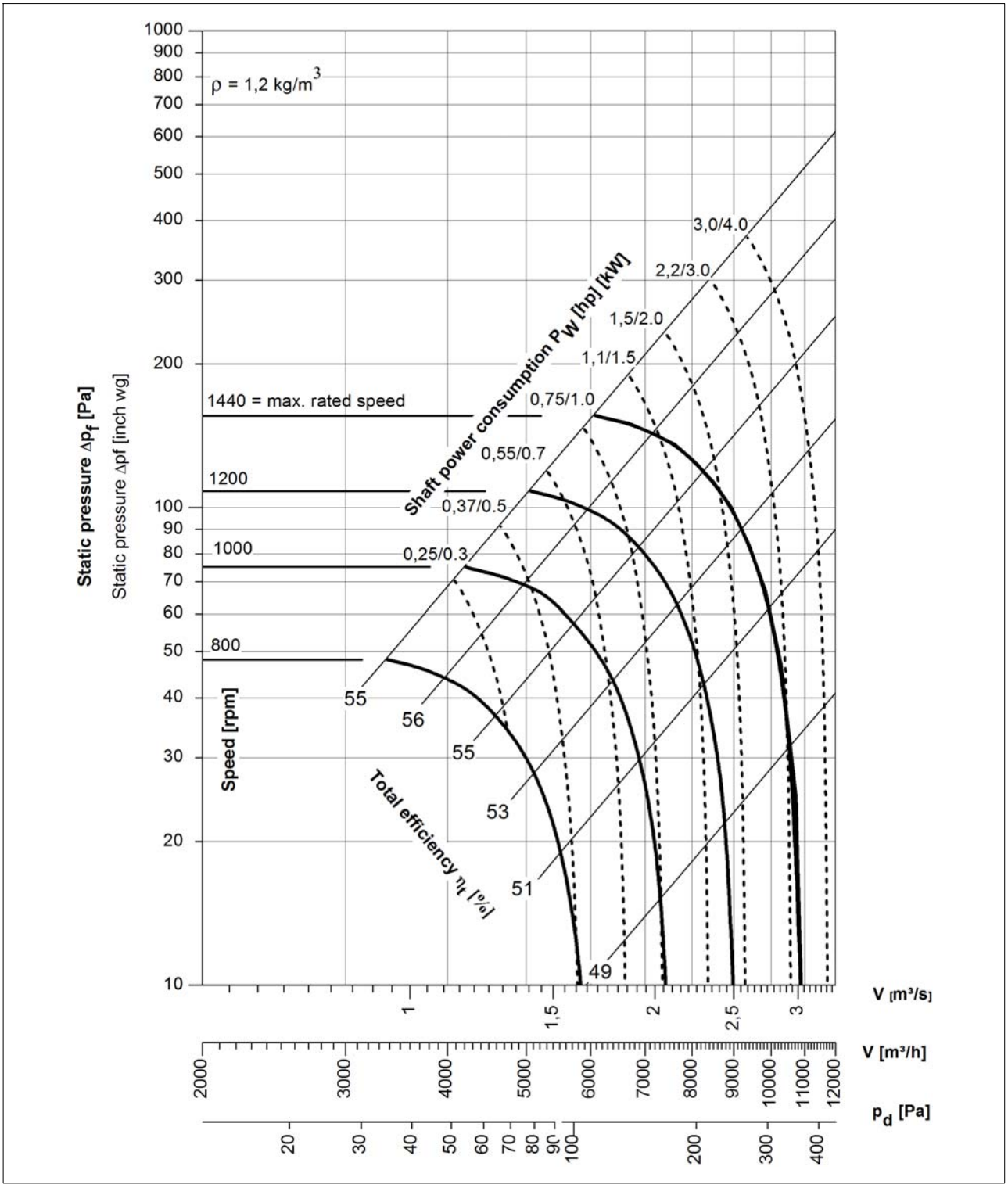

LTG High Performance Tangential Fans
Series TW, impeller diameter 200 mm

The tangential fan series TW 200 is a rigid industrial grade fan with enhanced corrosion protection and high power density.

LTG Tangential Fan type TWR 200
(right hand drive)

Service conditions

gas temperatures:
-13 °F / -25 °C up to +248 °F / 120 °C
ambient temperatures:
-13 °F/ -25 °C up to +104 °F / 40 °C

Specification and design features

Tangential fan with shaft end on the drive side.

Rigid bolted, corrosion proof casing of marine grade aluminium (DIN 1725). Impeller of galvanized steel.

The impeller is both sides bedded in self-aligning ball bearings. Bearing design life is 25 000 hours. The counter side bearing is mounted vibration dampened. Both bearings are lifetime lubricated.

Recommended V-belt pulley:
profile SPA 12.5 mm (0.49 inch), dw = 160 mm (6.3 inch). DIN 7753.
The maximum rated power transmission for the pulley is 9 kW (12 hp).
Intake and discharge openings have sealing planes and plug in slots to connect exactly to ducts and appliances. The complete fan (including bearing clearance etc.) is balanced to grade Q 6.3 according to VDI 2060.

Length tolerances acc. to ISO 2768 vL.

Delivery range series TW impeller diameter 200 mm

type	max. medium temperatures	impeller length	casing	impeller
TWR 200/400/N TWL 200/400/N	-25 °C to +120 °C (-13 °F to +248 °F)	400 mm (15.75 inch)	marine grade aluminium	galvanized steel
TWR 200/630/N TWL 200/630/N		630 mm (24.8 inch)		
TWR 200/800/N TWL 200/800/N		800 mm (31.5 inch)		
TWR 200/1000/N TWL 200/1000/N		1000 mm (39.37 inch)		
TWR 200/1250/N TWL 200/1250/N		1250 mm 49.21 inch)		

TWR = right hand drive
TWL = left hand drive

LTG High Performance Tangential Fans
Series TW, impeller diameter 200 mm

Position of the fan

Any arrangement is possible.

Installation and start up

Fix the fans without any distortion to a plane base frame. For fixation of the fan use only the bolt holes provided in the side elements.

To connect to ducts and appliances sealing planes are provided over the whole fan width for the intake and discharge openings.

Make sure to observe the applicable safety codes before starting the fans.

Check V-belt selection for higher temperature applications.

The fans are designed for continuous operation with constant load (operation mode S1 analogous to VDE 0530): For frequent start/stop operation please check with LTG.

Dimensions and performance data

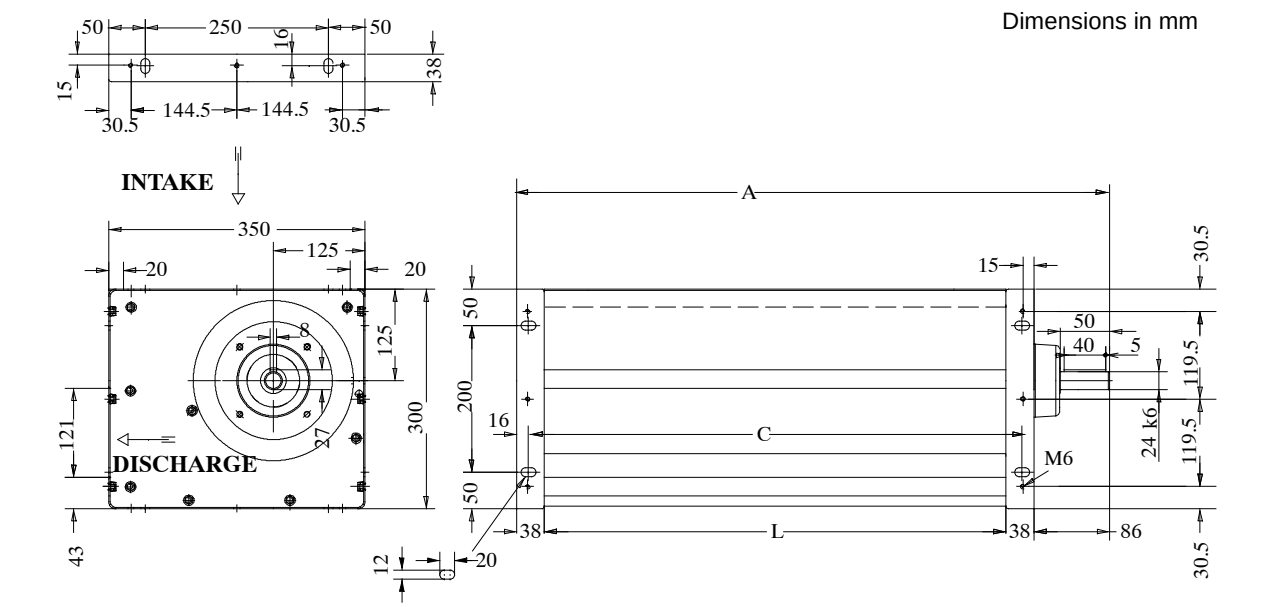

type/ nominal length	dimensions L [mm] [inch]	A [mm] [inch]	C [mm] [inch]	air-volume V_{max} [m³/h] [cfm]	pressure Δp_{fmax} [Pa] [" wg]	speed n_{max} [rpm]	masses appr. [kg] [lb]
TWR 200/400/N TWL 200/400/N	400 15.75	562 22.13	444 17.48	6000 3550	550 2.2	2400	16 36
TWR 200/630/N TWL 200/630/N	630 24.8	792 31.18	674 26.54	8000 4700	400 1.6	2100	20 44
TWR 200/800/N TWL 200/800/N	800 31.5	962 37.87	844 33.23	9000 5300	300 1.2	1800	24 53
TWR 200/1000/N TWL 200/1000/N	1000 39.37	1162 45.75	1044 41.10	10000 5900	240 1	1600	28 62
TWR 200/1250/N TWL 200/1250/N	1250 49.21	1412 55.59	1294 50.94	9000 5300	140 0.6	1200	32 71

LTG LTG High Performance Tangential Fans
Series TW, impeller diameter 200 mm

Plug in slots

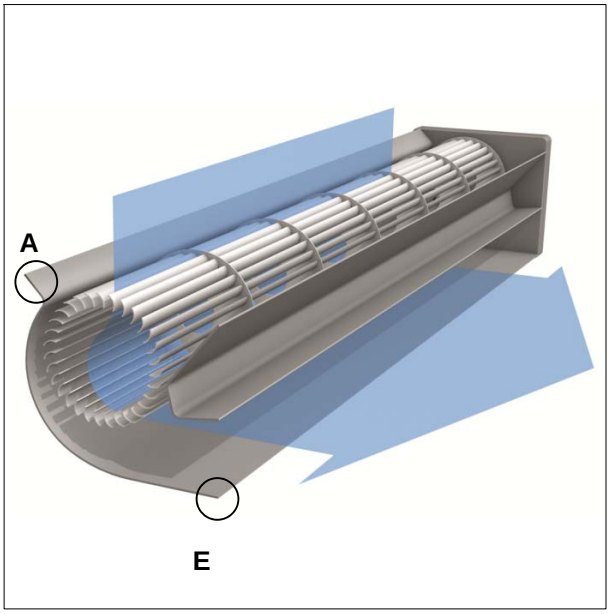

Plug in slots over the full fan width

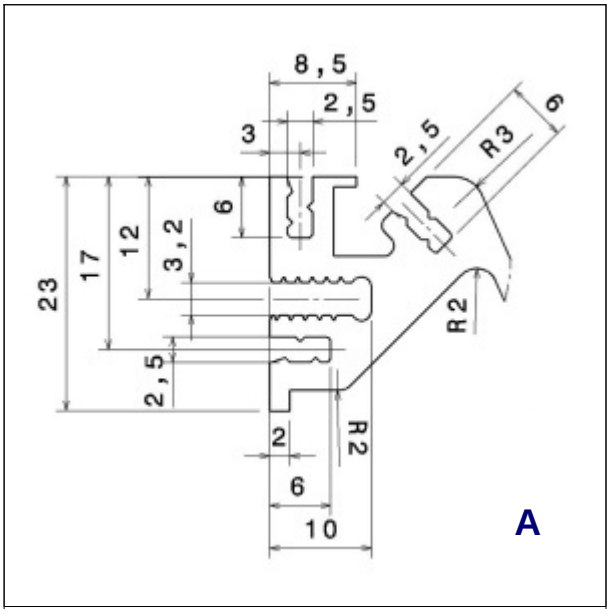

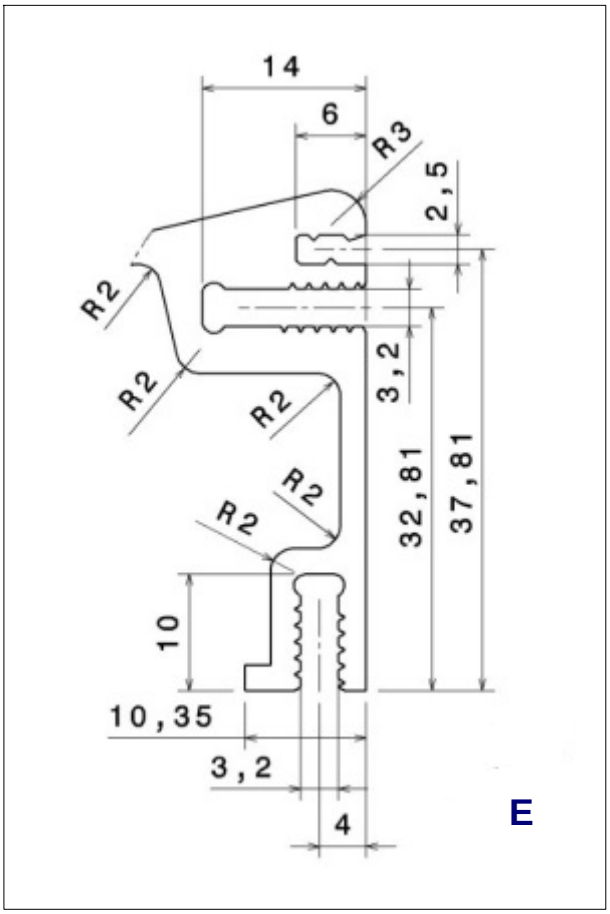

LTG High Performance Tangential Fans
Series TW, impeller diameter 200 mm

Fan curves for nominal length 400 mm (15.75 inch)

The indicated shaft power consumption does **not** include the loss in the belt drive

Test conditions for the fan curves

The indicated curves are valid for an air density of ρ =0.075 lb/ft³ (1.2 kg/m³). The rating tests where done as laboratory test according to EN ISO 5801:2008 with unrestricted inlet and discharge. Fans with a drive power > 4.0 hp (3.0 kW) must be smoothly started.

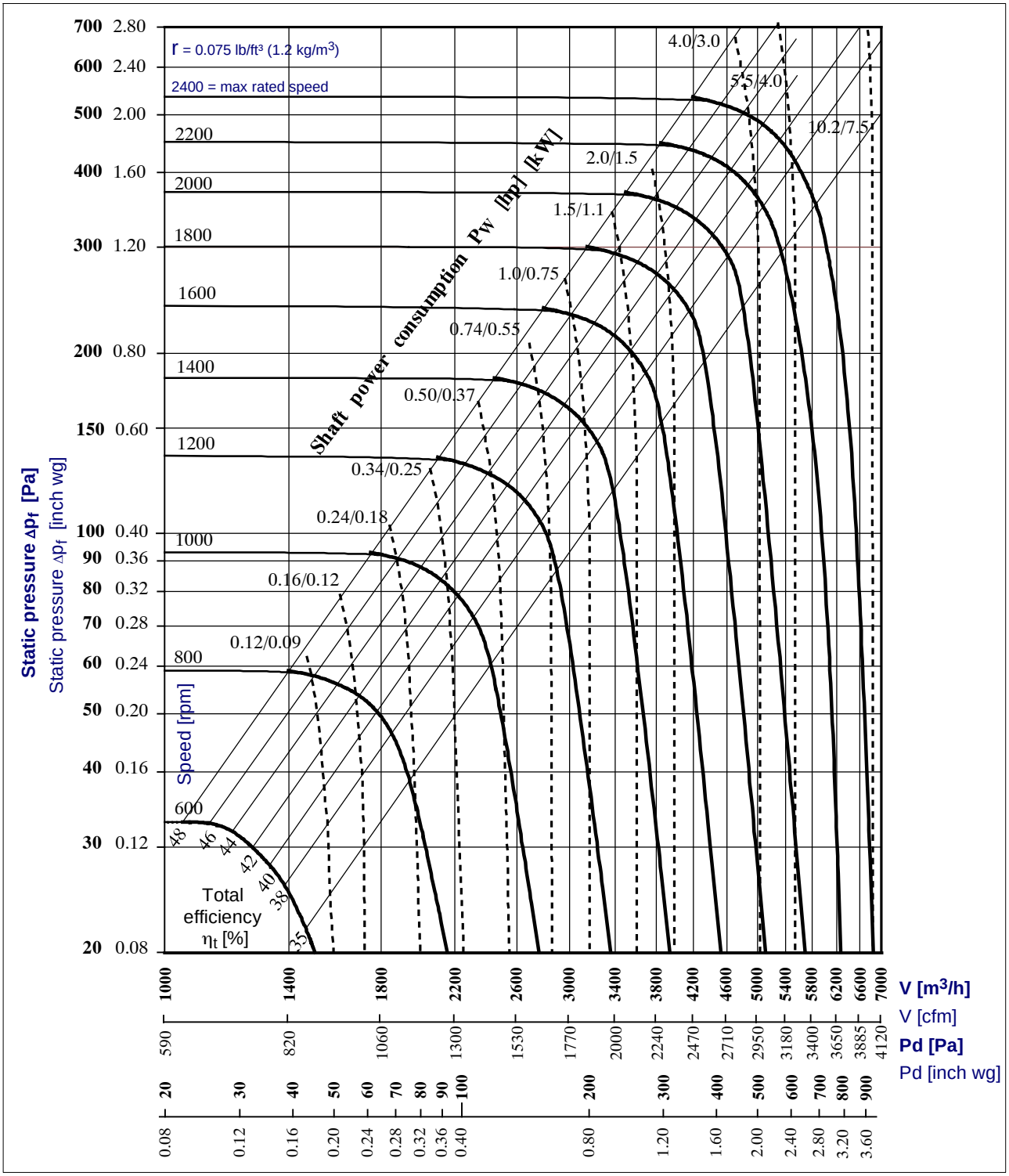

LTG High Performance Tangential Fans
Series TW, impeller diameter 200 mm

Fan curves for nominal length 630 mm (24.8 inch)

The indicated shaft power consumption does **not** include the loss in the belt drive

Test conditions for the fan curves

The indicated curves are valid for an air density of ϱ =0.075 lb/ft³ (1.2 kg/m³). The rating tests where done as laboratory test according to EN ISO 5801:2008 with unrestricted inlet and discharge. Fans with a drive power > 4.2 hp (3.0 kW) must be smoothly started.

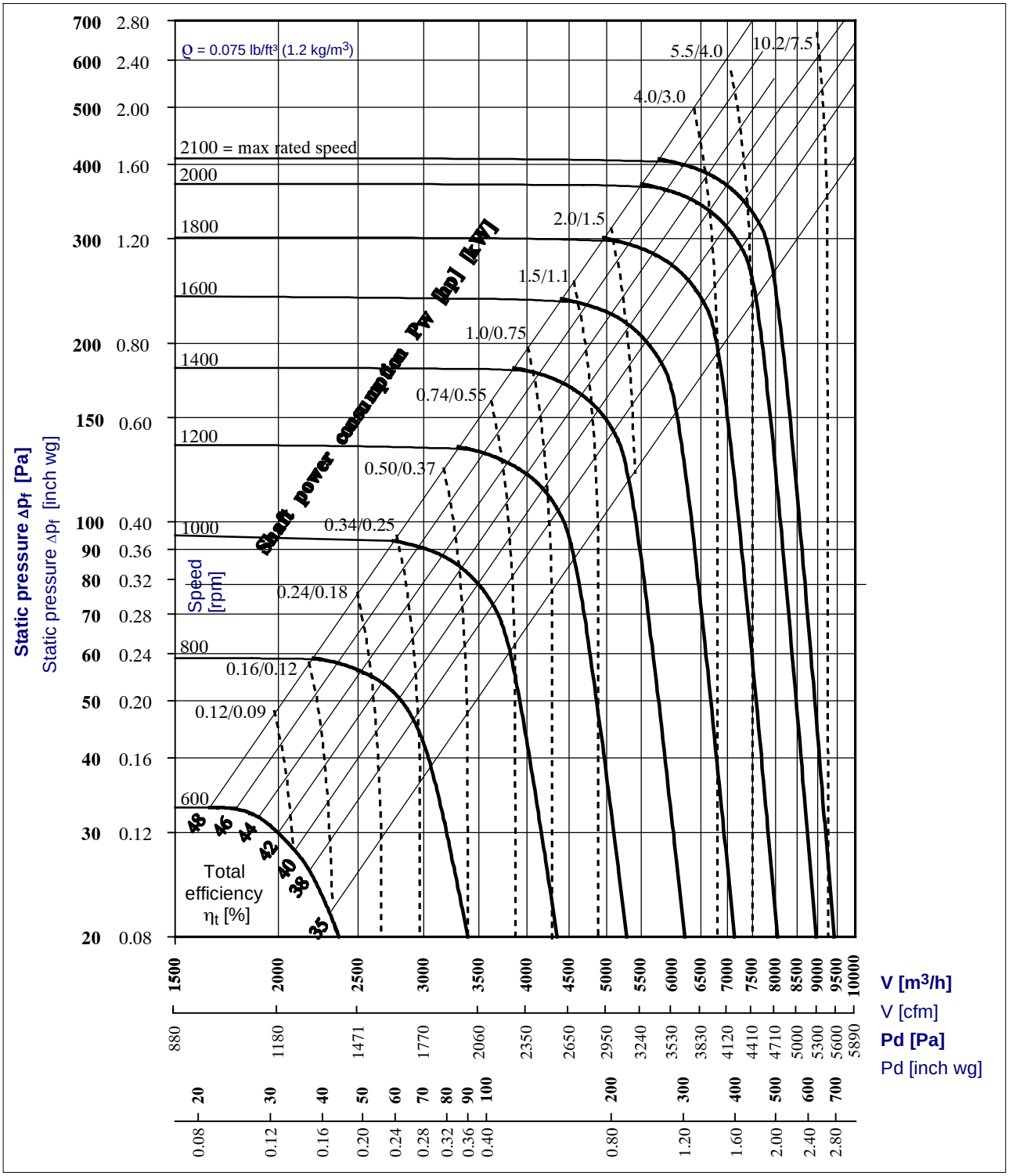

LTG High Performance Tangential Fans
Series TW, impeller diameter 200 mm

Fan curves for nominal length 800 mm (31.5 inch)

The indicated shaft power consumption does **not** include the loss in the belt drive

Test conditions for the fan curves

The indicated curves are valid for an air density of ϱ =0.075 lb/ft³ (1.2 kg/m³). The rating tests where done as laboratory test according to EN ISO 5801:2008 with unrestricted inlet and discharge. Fans with a drive power > 4.0 hp (3.0 kW) must be smoothly started.

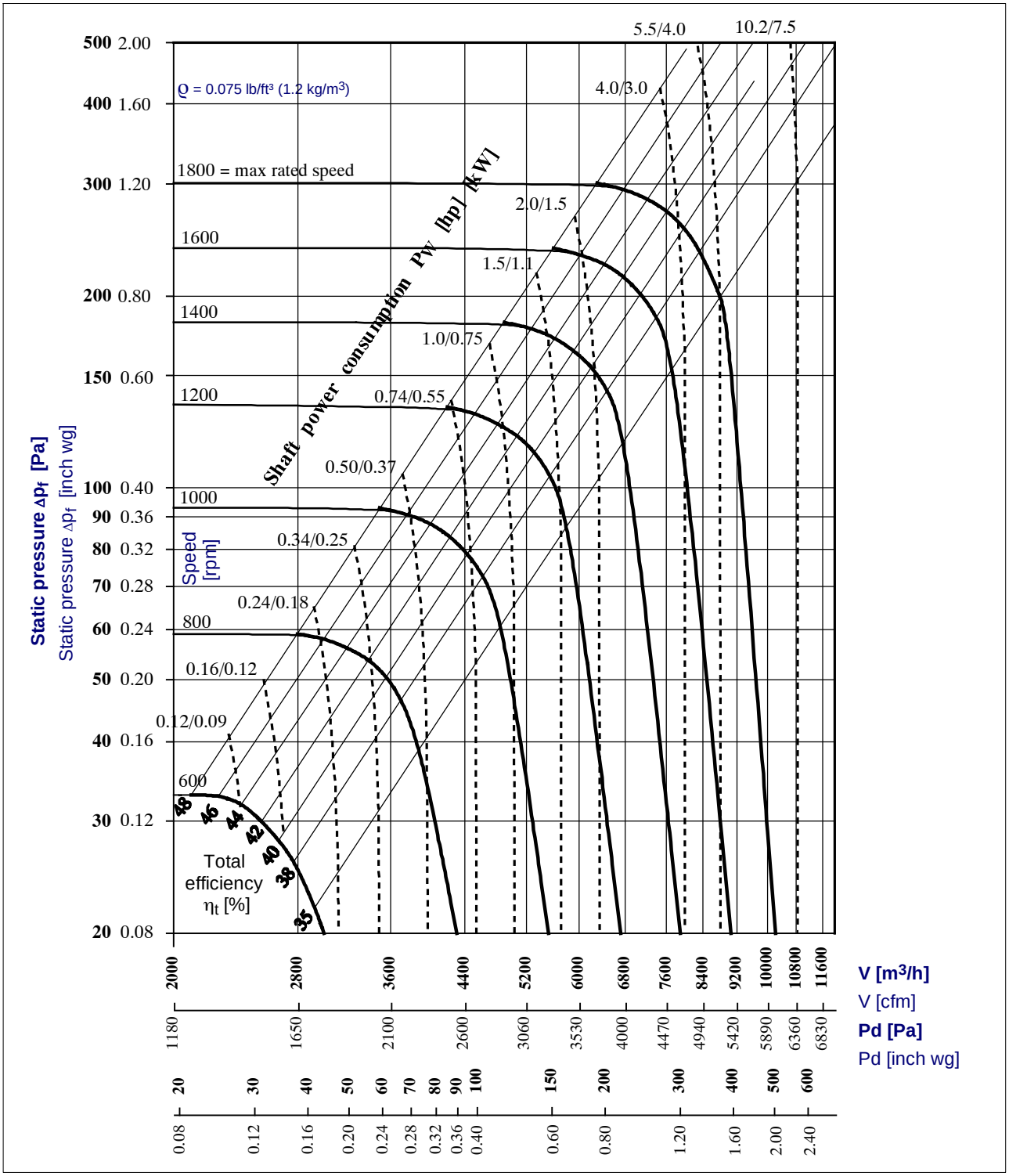

LTG High Performance Tangential Fans
Series TW, impeller diameter 200 mm

Fan curves for nominal length 1000 mm (39.37 inch)

The indicated shaft power consumption does **not** include the loss in the belt drive

Test conditions for the fan curves

The indicated curves are valid for an air density of ϱ =0.075 lb/ft³ (1.2 kg/m³). The rating tests where done as laboratory test according to EN ISO 5801:2008 with unrestricted inlet and discharge. Fans with a drive power > 4.0 hp (3.0 kW) must be smoothly started.

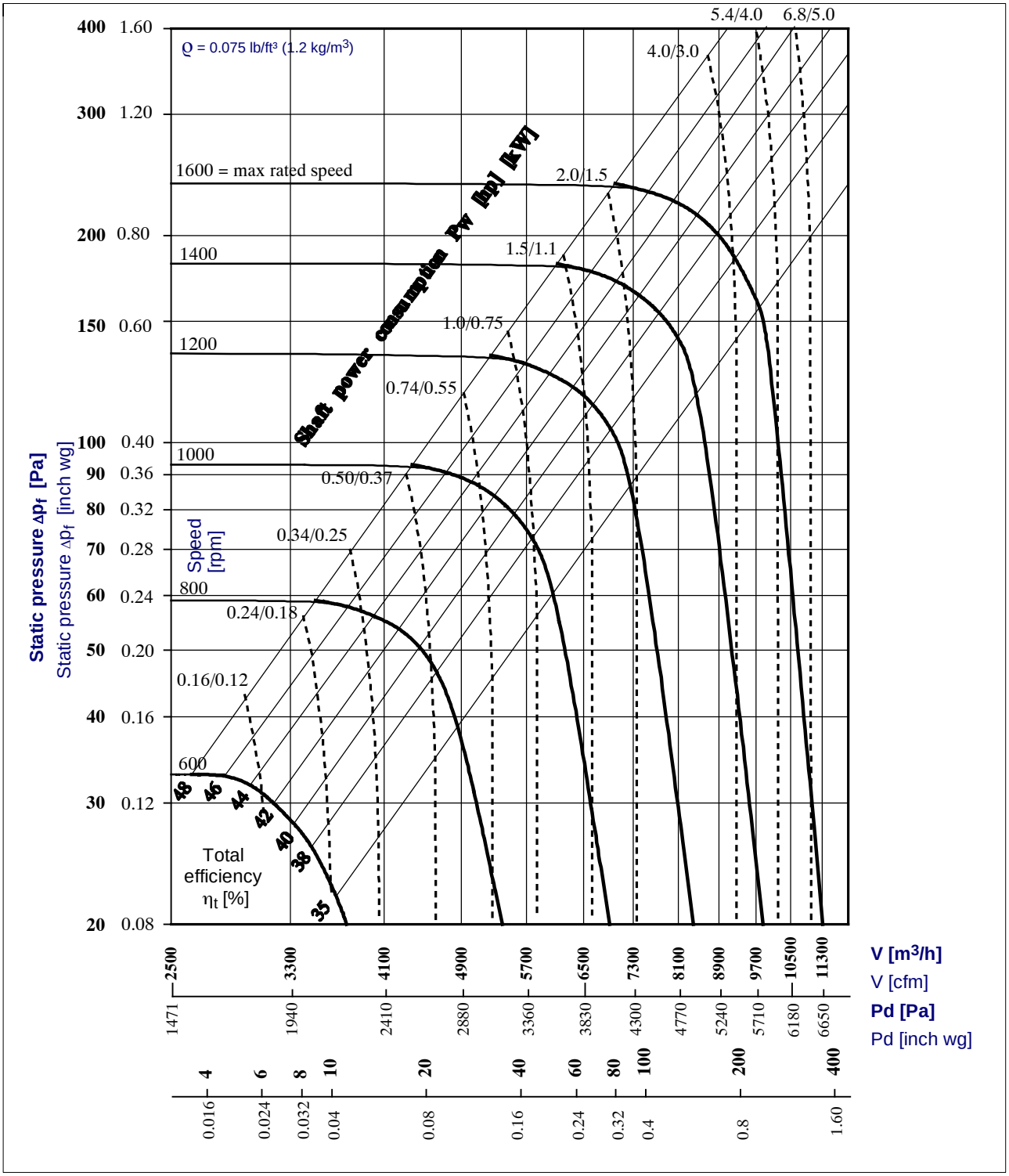

LTG High Performance Tangential Fans
Series TW, impeller diameter 200 mm

Fan curves for nominal length 1250 mm (49.21 inch)

The indicated shaft power consumption does **not** include the loss in the belt drive

Test conditions for the fan curves

The indicated curves are valid for an air density of ϱ =0.075 lb/ft³ (1.2 kg/m³). The rating tests where done as laboratory test according to EN ISO 5801:2008 with unrestricted inlet and discharge. Fans with a drive power > 4.0 hp (3.0 kW) must be smoothly started.

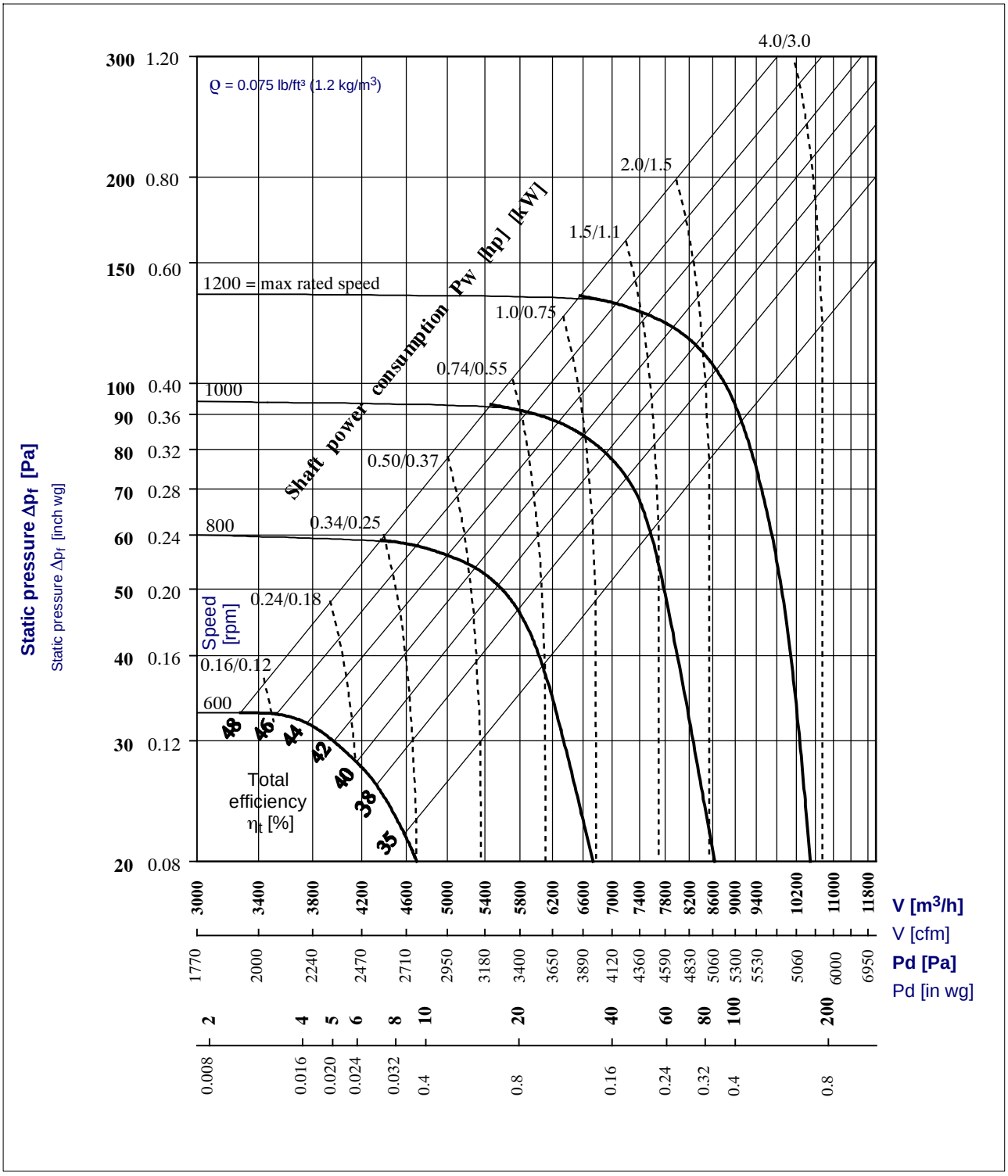

LTG High Performance Tangential Fans
Series TW, impeller diameter 150 and 200 mm

Acoustical data

The acoustical data are for discharge side, tested in a reverberant field.

The A-weighted sound power level L_{WA} can be transformed into a A-weighted sound pressure level L_{PA} by the equation $L_{PA}=L_{WA}-10 \log s/1\ m^2$.

The sound pressure level in the free field in 1 m distance (full spheric sound radiation) is abt. 11 dB less than the sound power level.

The equation for the unweighted sound power level according to VDI 2081 is:
$L_W=L_{Wspecific}+10 \log V + 20 \log \Delta p_t$

For the total pressure Δp_t use Pa and for the air volume V use m^3/s.

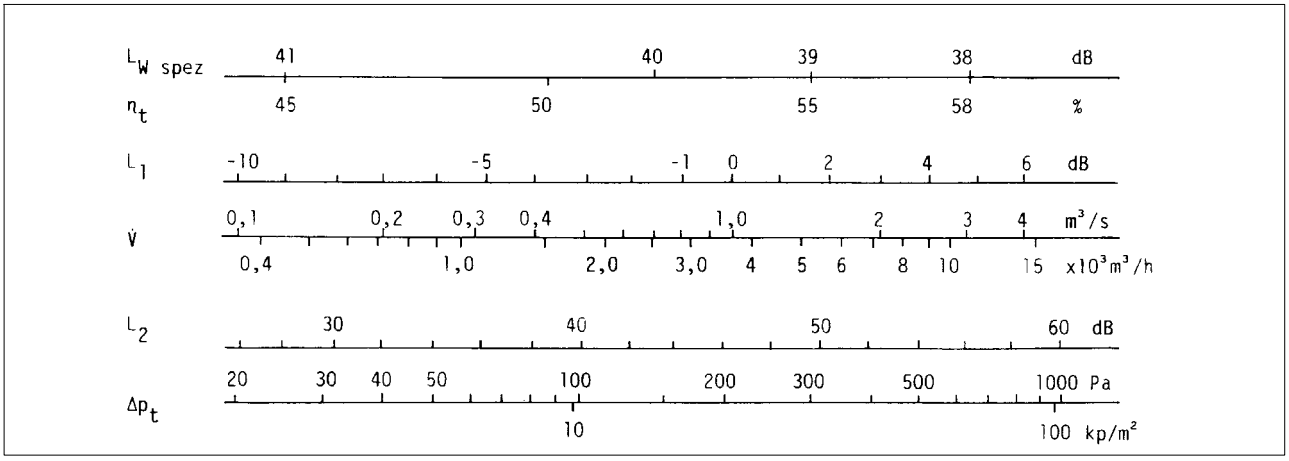

Unweighted Sound Power Level L_W [dB] $L_W = L_{Wspez} + L_1 + L_2$ *[dB]*

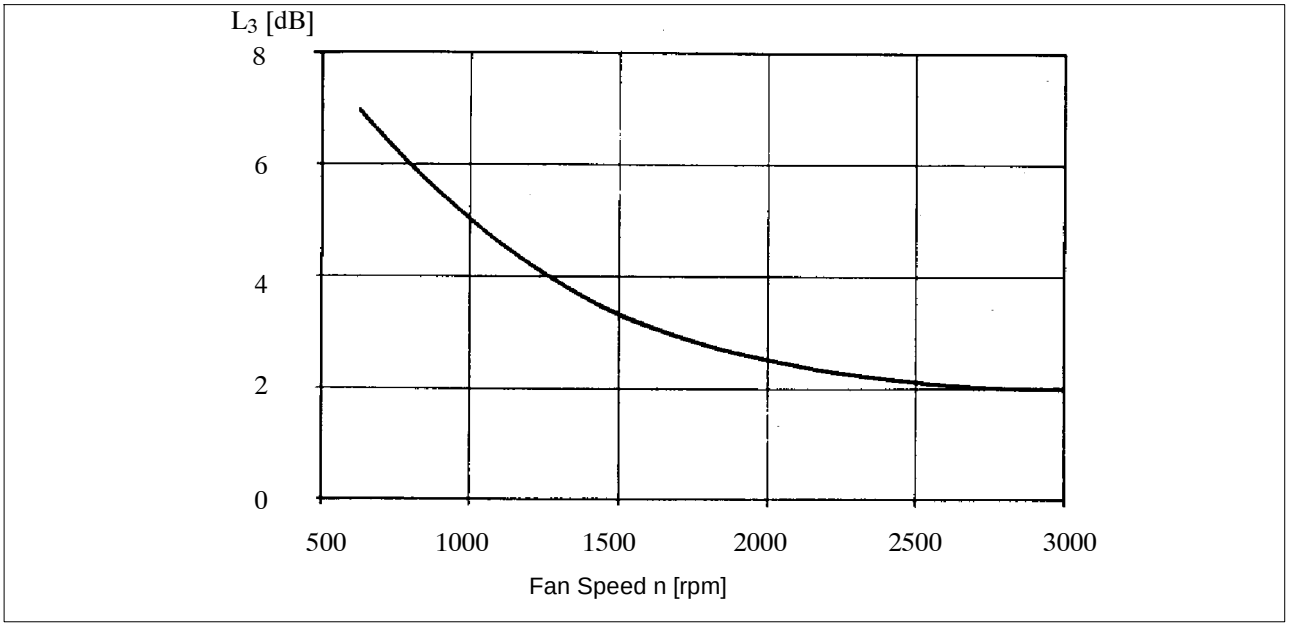

A-weighted Sound Power Level L_{WA} [dBA] $L_{WA} = L_W - L_3$ *[dBA]*

LTG High Performance Tangential Fans
Series TW, impeller diameter 150mm and 200 mm

Accessories and special versions

Belt pulley

V-belt pulley with sleeve, d_W = 160 mm (6.3 inch), profile SPA 12.5 mm (0.49 inch), DIN 7753.

With the suction opening on top, viewed against the discharge opening, the drive pulley is bolted on optional either right hand (TWR) or left hand (TWL).

Belt pulley and taper clamping sleeve are made from grey cast iron GG 20.

LTG Accessories:
V-belt pulley 1 x SPA Ø 160 mm (6.3 inch)
incl. clamping sleeve Ø 24 mm (0.94 inch)
Material No. 1004586

Impeller

For extra high corrosion protection requirements, the impellers can be made of stainless steel.

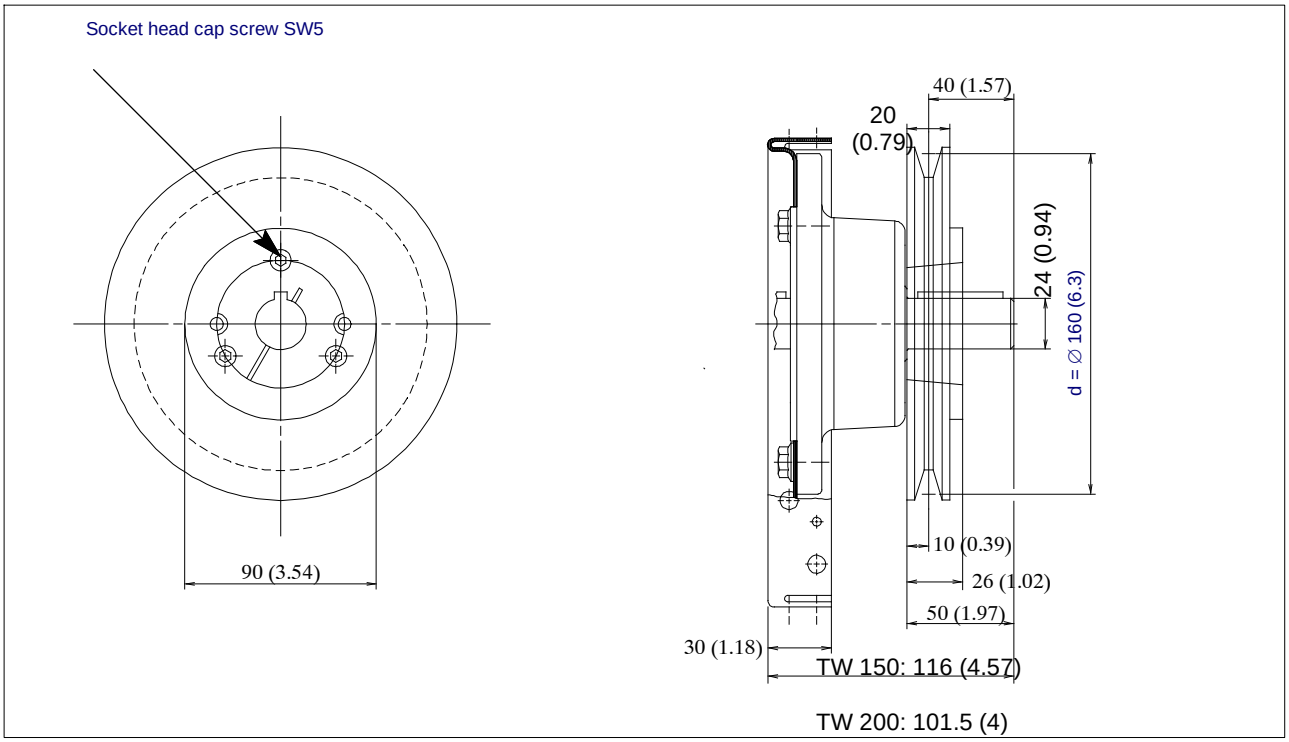

Installation, initiation

- Clean and degrease all shiny surfaces. Insert taper clamping sleeve into the hub and bring bores to a flush.
- Slightly grease screws and insert. Do not yet tighten the screws.
- Clean and degrease shaft. Push belt pulley with taper clamping sleeve to the desired position on the shaft.
- Tighten the screws uniformly, alternating between the sides and using a moment of 20 Nm.
- Check the moment of the screws after a short period of service (1/2 to 1 h) and correct if necessary.
- To keep foreign bodies from entering the empty bores, fill them with grease.

Detachment

- Loosen all screws. Remove one or two of them completely, grease and insert them into the ejection bores.
- Remove belt pulley with sleeve from the shaft.

LTG High Performance Tangential Fans
Series TW, impeller diameter 125, 150 and 200 mm

Selection

application			example	your data
gas			cold air	
gas temperature	t	[°F]	-4	
ambient temperature drive side counter side	 t t	 [°F] [°F]	 -5 -5	
condensation			yes	
located at			vehicle refrigeration	
drive side			right hand	
arrangement			horizontal	
drive motor				
power supply			3-phase	
voltage	U	[V]	220 / 380	
frequency	f	[Hz]	50	
specified performance				
air volume	V	[cfm]	4709	
static pressure	Δp_f	[in "wg]	250	
at specific gravity	ϱ	[lb/cu ft]	0.075	
active impeller length min. max.	L L	[inch] [inch]	35.43 51.18	
total length max.	A	[inch]	55.12	
procedure				
1. air volume	V	[cfm]	4709	
achievable with length			1064, 1264	
2. static pressure	Δp_f	[in "wg]	1	
achievable with length		[inch]	41.89	
3. drive side			right hand	
selected				
LTG Tangential Fan type			TWR150/1064 N	
performance data				
air volume	V	[cfm]	4709	
static pressure	Δp_f	[in "wg]	250	
dynamic pressure	p_d	[in "wg]	1,51	
total pressure	Δp_t	[in "wg]	2.51	
exhaust velocity	c	[ft/min]	4921.25	
speed	n	[rpm]	2000	
efficiency	η_t	[%]	54	
shaft power consumption	P_W	[hp]	3.35	
smooth starting			no	
acoustical data				
$L_{W\,spez}$ spec. sound power level		[dB]	39.5	
L_1		[dB]	3.5	
L_2		[dB]	56	
sound power level	L_W	[dB]	99	
L_3		[dB]	2.5	
sound power level A-weighted	L_{WA}	[dBA]	96.5	
sound pressure level in the free field in 1 m distance (full spherical sound radiation)	L_{pA}	[dBA]	85.5	

designations

t	[°F]	temperature
U	[V]	voltage
f	[Hz]	frequency
V	[cfm]	air volume
ϱ	[lb/ft³]	specific gravity
Δp_f	[in. "wg]	static pressure
p_d	[in. "wg]	dynamic pressure at the discharge area
Δpt	[in. "wg]	total pressure
c	[m/s]	velocity at the discharge area
	[cu ft/lb]	specific gravity
n	[rpm]	speed
η_t	[%]	efficiency
P_W	[hp]	shaft power consumption
L_W	[dB]	sound power level
L_{WA}	[dB(A)]	A-weighted sound power level
L_{pA}	[dB(A)]	A-weighted sound pressure level

AIR TECH
SYSTEMS

Comfort Air Technology

Air Conditioning Systems

- Decentralized Facade Ventilation Units
- Fan Coil Units
- Induction Units,
  Active Chilled Beams

Air Diffusers

- Linear Air Diffusers
- Wall and Floor Mounted Air Diffusers
- Swirl Diffusers
- Industrial and Special Air Diffusers

Air Distribution

- Flow Rate and Pressure Controllers
- Shut-off and Balancing Dampers
- Silencers

Process Air Technology

Fans

- Tangential Fans
- Axial Fans
- Centrifugal Fans
- Fahrtwind-Simulators

Filtration Technology

- Suction Nozzles
- Dampers
- Filters, Dust Collectors
- Separators, Compactors

Humidification Technology

- Air Humidifiers
- Product Humidifiers

Engineering Services

Fluid Engineering

- Flow analysis
- Flow visualization
- CFD-simulations
- Flow optimization
- Air conditioning concepts

Thermodynamics

- Calorimetric performance measurement
- Thermal, dynamic, unsteady,
  system simulations

Acoustics

- Sound level measuring
- Vibration analysis
- Echo chamber measurement
- Acoustic optimization

Comfort

- Evaluation
- Optimization

Customer-specific Solutions

- Product development
- Process optimization
- Installation analysis

LTG Aktiengesellschaft
Grenzstraße 7
70435 Stuttgart
Germany
Tel.: +49 (711) 8201-0
Fax: +49 (711) 8201-696
E-Mail: info@LTG-AG.com
www.LTG-AG.com

LTG Incorporated
105 Corporate Drive, Suite E
Spartanburg, SC 29303
USA
Tel.: +1 (864) 599-6340
Fax: +1 (864) 599-6344
E-Mail: info@LTG-INC.net
www.LTG-INC.net

TW-eng-TP (10/14) 450-33