AIR TECH
SYSTEMS

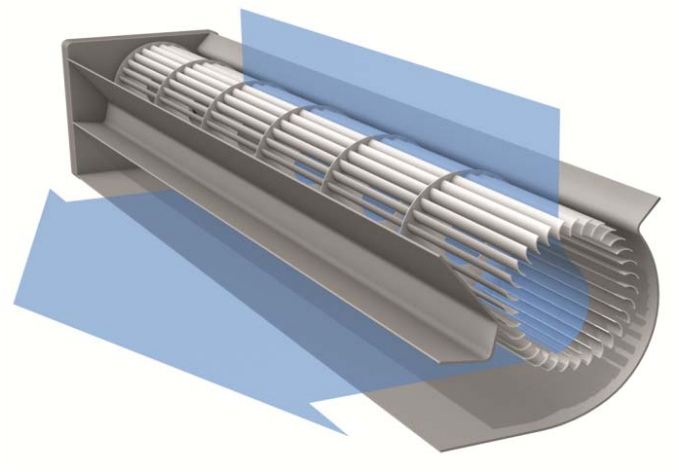

Technical Documentation

LTG High Performance Tangential Fans

Series TA / TA t / TE t / GA

Impeller diameter 90 mm

Content

LTG High Performance Tangential Fans-
an advantage for best heating, cooling, drying, blasting

Many production processes require an extended linear and absolutely even distribution of air or other gases over a certain area.

The special design of, High Performance Tangential Fans provides the optimum solution for these requirements.

The robust design and the use of high quality materials assure a long life expectancy.

The way these fans work, allowing even air distribution without additional baffles and vanes, and the space-saving design, make the use of tangential fans very economic.

Flow principle

In a tangential fan, the air is drawn in over the entire length of the fan impeller. Inside the impeller, the airflow is diverted and accelerated by the vortex created by the rotation of the impeller.

The airstream then exists over the entire length of the impeller ① on the discharge side. The vortex ② separates the intake and discharge side of the fan at the narrowest point betwen the impeller and the vortex builder. Together with the fan scroll ③, the vortex directs the airflow. This results in an almost uniform laminar airflow over the entire outlet width of the fan.

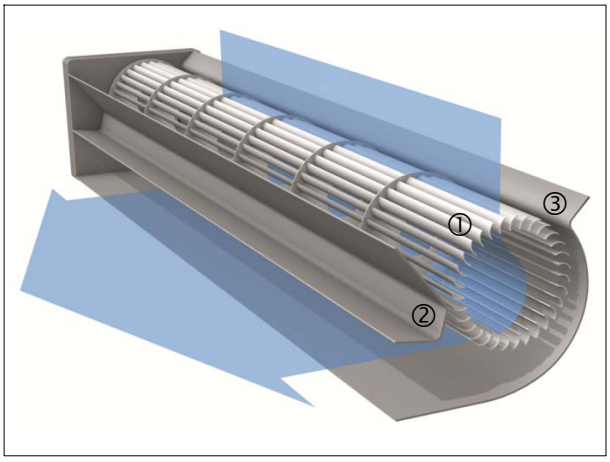

Airflow:Tangential fan type TA 90 / TE 90
Airflow deflection 90°.

① impeller
② vortex inducer
③ fan scroll

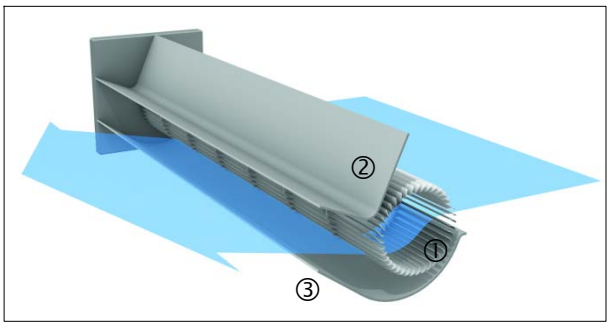

Airflow: Tangential fan type GA 90
Airflow deflection180°.

Advantages

- Uniform, extended airflow over large areas.
- Space-saving installation due to 90° or 180° airflow pattern.
- Fan length can be matched exactly to machine width.
- Airflow conditions remain the same even for wider machines (simplified design and drafting in case of modular systems).
- Fans perform well in any mounting position. Drive can be mounted on right or left hand side.
- Quiet operation due to optimised impeller and housing design.
- Long live expectancy due to robust design and location of bearings outside the hot air zone.
- Ex Explosion-proof models according to ATEX available.

Application of LTG High Performance Tangential Fans

- agricultural technology
- air-conditioning technology
- apparatus engineering
- automotive industry
- bakery technology
- biomedical industry
- building material industry
- chemical industry
- cleaning technology
- control panel technology
- dedusting technology
- drying technology
- electronic industry
- environmental simulations
- food industry
- furnace technology
- heat treatment technology
- mechanical and plant engineering
- medical technology
- packaging industry
- paper industry
- pharmaceutical industry
- power plant engineering
- process engineering
- railway technology
- refrigeration technology
- store design
- surface technology
- swimming pool technology
- textile machinery design
- tobacco industry
- transportation cooling
- wood industry
- ...

LTG High Performance Tangential Fans
Series TA, TA t, TE t and GA, impeller diameter 90 mm

General information

LTG Tangential Fans Series TA, TAt, TEt and GA can be universally applied for heating, cooling, drying and blasting. These fans are specially suitable where an extended airflow over a wide area is necessary.

Position of the fan

Standard arrangement is horizontal. With vertical arrangement the drive motor has to be at the bottom.

Installation and start up

Fix the fans to a plane base frame without any distortion.

For the fixation use only the bolt holes in the side elements. Make sure to observe the applicable safety codes before starting the fans.

Motor arrangement

With suction opening on top, viewed against the discharge opening, the driving motor is optional either right hand (TAR, TARt, TERt, GAR) or left hand (TAL, TALt, TELt, GAL).

Electrical equipment

The fan is driven by a 4-pole single phase TEFC induction motor with capacitor,
U = 220 V, f = 50 cps or U = 115 V, f = 60 cps.
Enclosure is IP 44 according to DIN 40050. This gives protection against dust deposits inside the motor and spray water.

The motor is also adjustable for special voltage and cycles according to the performance data.

Packaging

We are exclusively using cardboard packaging with the RESY-symbol, in order to secure the acceptance and recycling guaranties.

The wooden pallets, shrinking foils, inner packages of styrofoam used for the protection of the articles / products / goods are accepted by the recycling facilities which are affiliated to the RESY- association.

On request our despatch department will support you finding recycling facilities at your location.

Return deliveries of used packaging material will only be accepted if delivered DAP.

Electrical connection

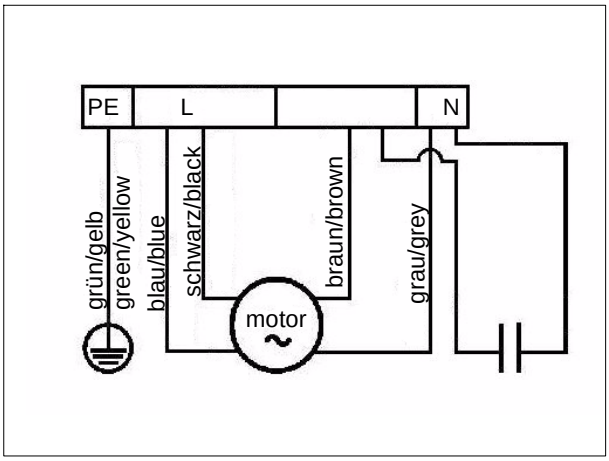

TAR / TER / GAR

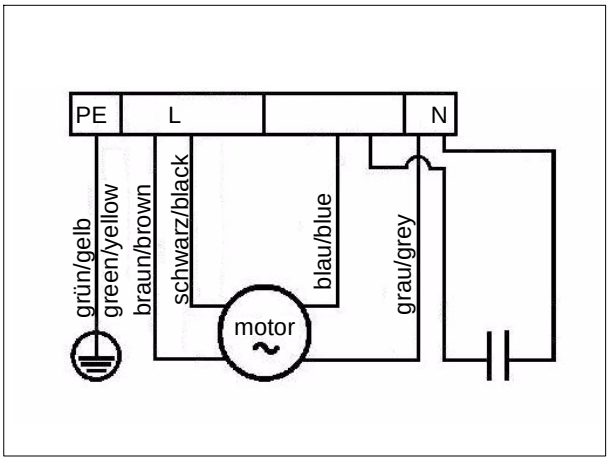

TAL / TEL / GAL

LTG High Performance Tangential Fans
Series TA, TA t and TE t, impeller diameter 90 mm

The tangential fan Series TA is a fan with enhanced corrosion resistance and suitable for use in low temperature applications.
The tangential fan Series TA t and TE t are fans with enhanced corrosion resistance and suitable for an extended temperature range.

Service conditions

Air / gas temperatures:

-40 °C up to +70 °C	TA
-40 °C up to +120 °C	TA t
-25 °C up to +200 °C	TE t

Ambient temperatures:

drive side with motor:	-25 °C up to +40 °C
counter side (TA / TA t):	-40 °C up to +70 °C
counter side (TE t):	-25 °C up to +70 °C

Series TA, TA t, TE t, the range

type	air / gas temperatures	impeller length	casing	impeller	motor*	
TAR/L 90/397/N	-40 °C to +70 °C (-40 °F to +158 °F)	397 mm (15.63 in)	marine grade alu-minium	marine grade alu-minium	230 V, 50/60 Hz	IP 44
TAR 90/397/24V					24 V	IP 42
TAR/L 90/397/US					115 V, 60 Hz	IP 44
TAR/L 90/597/N		597 mm (23.5 in)			230 V, 50/60 Hz	IP 44
TAR 90/597/24V					24 V	IP 42
TAR/L 90/597/US					115 V, 60 Hz	IP 44
TAR/L 90/827/N		827 mm (32.56 in)			230 V, 50 Hz	IP 44
TAR 90/827/24V					24 V	IP 42
TAR/L 90/827/US					115 V, 60 Hz	IP 44
TAR/L 90/1027/N		1027 mm (40.43 in)			230 V, 50 Hz	IP 44
TAR 90/1027/24V					24 V	IP 42
TAR/L 90/1027/US					115 V, 60 Hz	IP 44
TAR/L t 90/397/N	-40 °C to +120 °C (-40 °F to +248 °F)	397 mm (15.63 in)			230 V, 50/60 Hz	IP 44
TAR t 90/397/24V					24 V	IP 42
TAR/L t 90/397/US					115 V, 60 Hz	IP 44
TAR/L t 90/597/N		597 mm (23.5 in)			230 V, 50/60 Hz	IP 44
TAR t 90/597/24V					24 V	IP 42
TAR/L t 90/597/US					115 V, 60 Hz	IP 44
TER/L t 90/397 N	-25 °C bis +200 °C (-13 °F to +392 °F)	397 mm (15.63 in)		stainless steel	230 V, 50/60 Hz	IP 44
TER t 90/397 24V					24 V	IP 42
TER/L t 90/397 US					115 V, 60 Hz	IP 44
TER/L t 90/597 N		597 mm (23.5 in)			230 V, 50/60 Hz	IP 44
TER t 90/597 24V					24 V	IP 42
TER/L t 90/597 US					115 V, 60 Hz	IP 44
TER/L t 90/827 N		827 mm (32.56 in)			230 V, 50/60 Hz	IP 44
TER t 90/827 24V					24 V	IP 42
TER/L t 90/827 US					115 V, 60 Hz	IP 44

**) The standard motor can be used for every voltage and frequency indicated. Version 115 V, 60 Hz is UL/CSA approved.*

Special lengths on request.

LTG High Performance Tangential Fans
Series TA, impeller diameter 90 mm (-40 up to +70 °C)

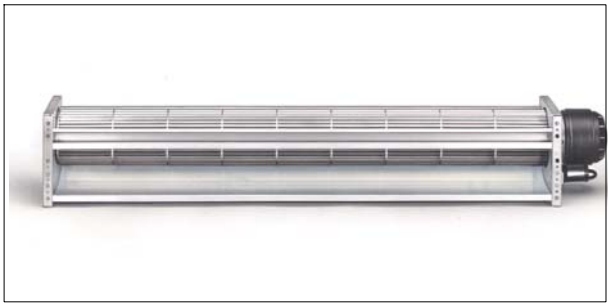

Tangential fan type TAR 90 (right hand drive)

Specification and design features

Tangential fan with close coupled, spray water protected drive motor.

Rigid bolted, corrosion proof casing. Impeller and casing of marine grade aluminium. Side elements of stainless steel (1.4301). On the drive side the impeller is bedded via an elastic coupling on the motor shaft; on the counter side in vibration damped friction bearings from sinter bronze with an ample grease reserve.

Bearing design life is 20 000 hours. Drive motor wired with capacitor and terminal block. Intake and discharge openings have sealing planes to connect exactly to ducts and appliances. Low noise operation due to aerodynamically good impeller and scroll shape.

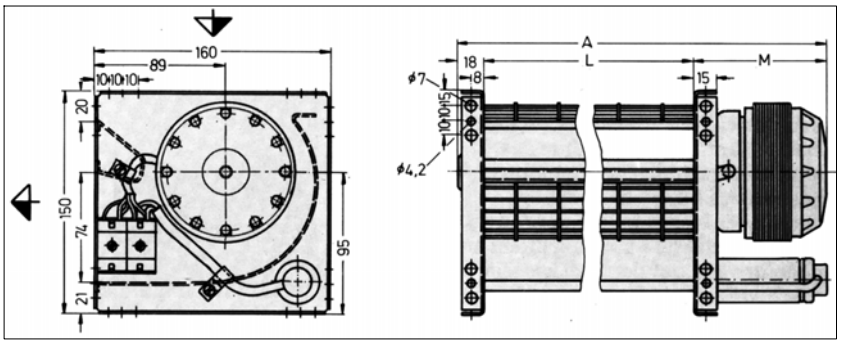

Dimensions and performance data

type	dimensions [mm] [inch] A	L	M	air volume V [m³/h] [cfm]	speed n [rpm]	power consumption P_A [W]	full load amps J_A [A]	capacitor [µF]	[V]	masses [kg] [lb]
TAR/L 90/397/N	502 (19.76)	397 (15.63)	87 (3.43)	800 (471)	1230	68	0.31	2	400	2.9 (6.4)
TAR 90/397/24V	494 (19.45)	397 (15.63)	79 (3.11)	980 (577)	1700	83	3,46	-	-	2,6 (5.7)
TAR/L 90/397/US	520 (20.47)	397 (15.63)	105 (4.13)	940 (553)	1570	115	1.00	12	220	2.9 (6.4)
TAR/L 90/597/N	702 (27.63)	597 (23.5)	87 (3.43)	1040 (612)	1050	77	0.35	2	400	3.4 (7.5)
TAR 90/597/24V	694 (27,32)	597 (23.5)	79 (3.11)	1320 (777)	1450	96	4	-	-	3,1 (6.8)
TAR/L 90/597/US	720 (28.35)	597 (23.5)	105 (4.13)	1340 (789)	1390	134	1.17	12	220	3.4 (7.5)
TAR/L 90/827/N	950 (37.4)	827 (32.6)	105 (4.13)	1640 (965)	1210	115	0.52	4	400	4.6 (10.1)
TAR 90/827/24V	924 (36.4)	827 (32.6)	79 (3.11)	1630 (959)	1300	106	4,42	-	-	4,3 (9.5)
TAR/L 90/827/US	950 (37.4)	827 (32.6)	105 (4.13)	1660 (977)	1220	149	1.28	12	220	4.6 (10.1)
TAR/L 90/1027/N	1150 (45.28)	1027 (40.43)	105 (4.13)	1860 (1095)	1150	123	0.56	4	400	5.2 (11.5)
TAR 90/1027/24V	1124 (44.25)	1027 (40.43)	79 (3.11)	1790 (1054)	1200	112	4,7	-	-	4,9 (10.8)
TAR/L 90/1027/US	1150 (45.28)	1027 (40.43)	105 (4.13)	1630 (960)	1130	150	1.31	12	220	5.2 (11.5)

LTG High Performance Tangential Fans
Series TAt, impeller diameter 90 mm (-40 up to +120 °C)

Tangential fan type TAR t 90 (right hand drive)

Specification and design features

Tangential fan with close coupled, spray water protected drive motor.

Rigid bolted, corrosion proof casing. Impeller and casing of marine grade aluminium. Side elements of stainless steel (1.4301). On the drive side the impeller is bedded via an elastic coupling on the motor shaft; on the counter side in vibration damped friction bearings from sinter bronze with an ample grease reserve.

Bearing design life is 20 000 hours. Drive motor wired with capacitor and terminal block. Intake and discharge openings have sealing planes to connect exactly to ducts and appliances.

Low noise operation due to aerodynamically good impeller and scroll shape.

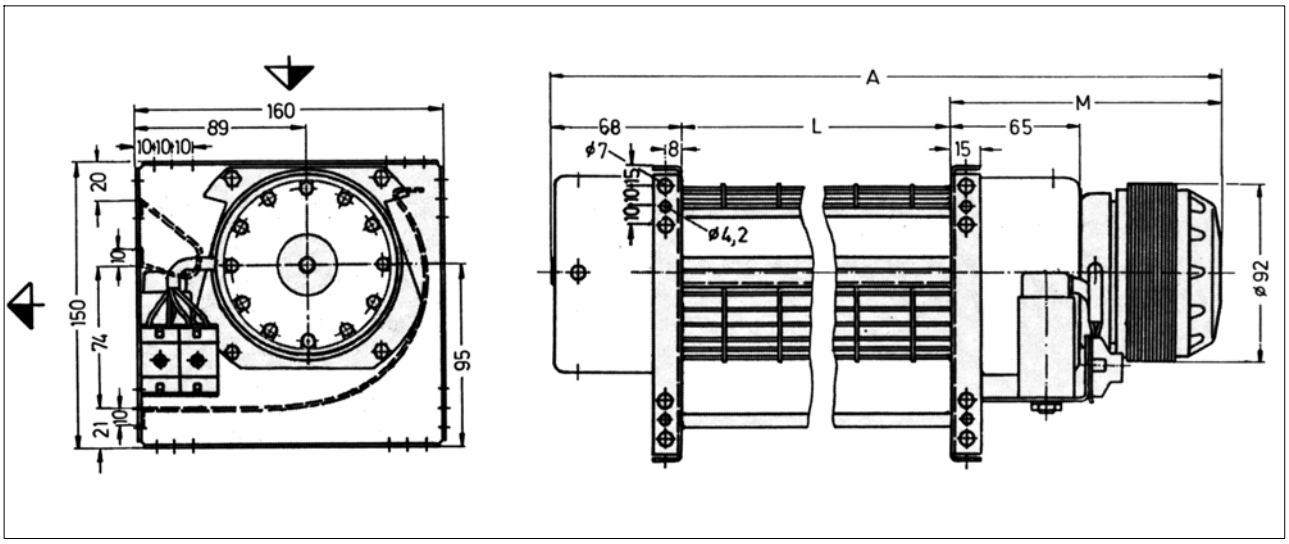

Dimensions and performance data

type	dimensions [mm] [inch]			air volume V	speed n	power consumption P_A	full load Amps J_A	capacitor		masses
	A	L	M	[m³/h] [cfm]	[rpm]	[W]	[A]	[µF]	[V]	[kg] [lb]
TAR/Lt 90/397/N	603 (23.74)	397 (15.63)	138 (5.43)	800 (471)	1230	68	0.31	2	400	3.2 (7.05)
TARt 90/397/24V	595 (23.43)	397 (15.63)	130 (5.12)	980 (577)	1700	83	3,46	-	-	2,9 (6.39)
TAR/Lt 90/397/US	621 (24.45)	397 (15.63)	155 (6.1)	940 (553)	1570	115	1.00	12	220	3.2 (7.05)
TAR/Lt 90/597/N	803 (31.61)	597 (23.5)	138 (5.43)	1040 (612)	1050	77	0.35	2	400	3.7 (8.16)
TAR t 90/597/24V	795 (31.30)	597 (23.5)	130 (5.12)	1320 (777)	1450	96	4	-	-	3,4 (7.5)
TAR/Lt 90/597/US	821 (32.32)	597 (23.5)	155 (6.1)	1340 (789)	1390	134	1.17	12	220	3.7 (8.16)

LTG High Performance Tangential Fans
Series TA and TA t, impeller diameter 90 mm

Fan curves for 220 V, 50 Hz

Test conditions for the fan curves

The indicated curves are valid for an air density of $\varrho = 1.2$ kg/m^3, a supply voltage of U = 220 V with f = 50 cps, if operated with a 4-pole motor. The rating tests where done as laboratory tests according to EN ISO 5801:2008 with unrestricted inlet and discharge.

Measuring tolerances for Δp: $\pm$2Pa;
Measuring tolerances for L_{WA} : $\pm$2dB (A)

Acoustical data

The acoustical data are for discharge side, tested in a reverberant field.
The A-weighted sound power level L_{WA} can be transformed into an A-weighted sound pressure level by the equation $L_{pA} = L_{WA} - 10 \log S/1\ m^2$. For this the exact total panel area S can be used.
The sound pressure level in the free field in 1 m distance (full spherical sound radiation) is about. 11 dB less than the sound power level.

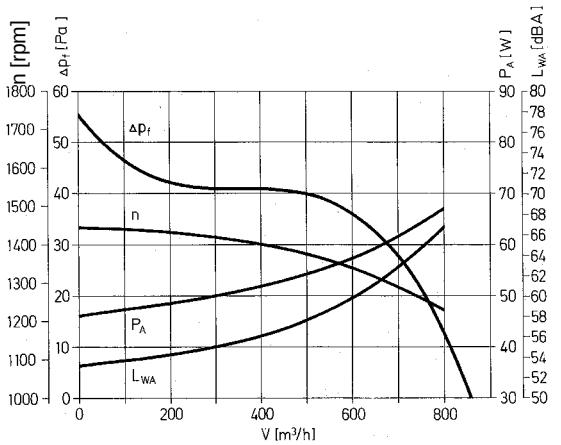

Fan curves for 397 mm nominal length

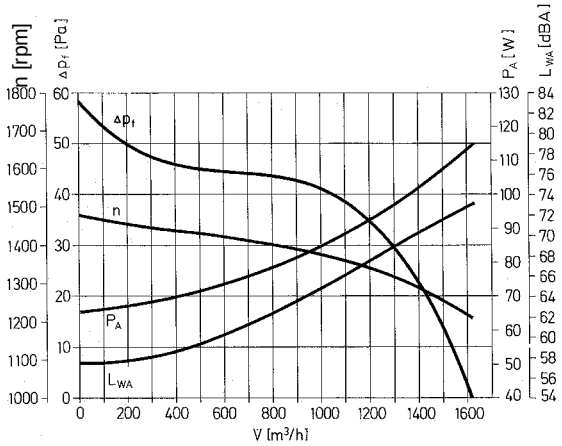

Fan curves for 827 mm nominal length

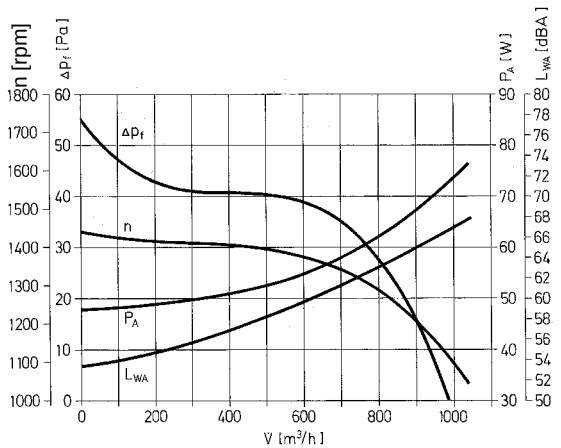

Fan curves for 597 mm nominal length

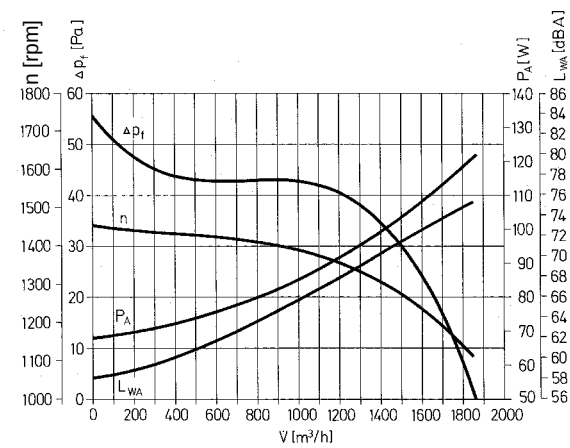

Fan curves for 1027 mm nominal length

LTG High Performance Tangential Fans
Series TA and TA t, impeller diameter 90 mm

Fan curves for 110 -115 V, 60 Hz

Test conditions for the fan curves

The indicated curves are valid for an air density of ϱ = 1.2 kg/m^3, a supply voltage of U = 110-115 V with f = 60 cps, if operated with a 4-pole motor.

The rating tests where done as laboratory tests according to EN ISO 5801:2008 with unrestricted inlet and discharge.

Acoustical data

The acoustical data are for discharge side, tested in a reverberant field.
The A-weighted sound power level L_{WA} can be transformed into an A-weighted sound pressure level by the equation L_{pA}= L_{WA} - 10 log S/1 m^2. For this the exact total panel area S can be used. The sound pressure level in the free field in 1 m distance (full spherical sound radiation) is about 11 dB less than the sound power level.

Measuring tolerances for Δp: $\pm$2Pa;
Measuring tolerances for L_{WA} : $\pm$2dB (A)

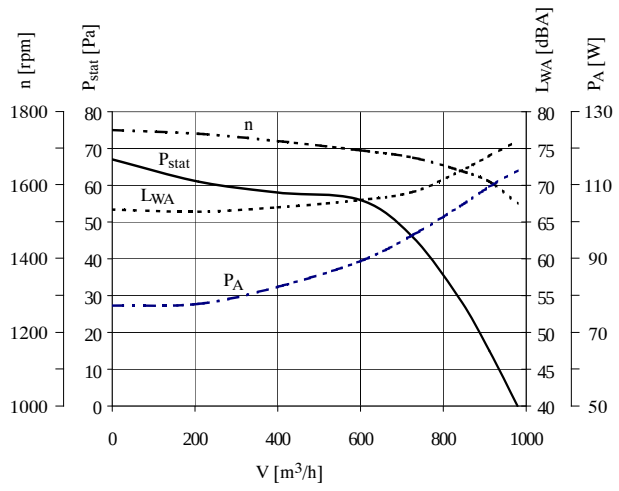

Fan curves for 397 mm nominal length

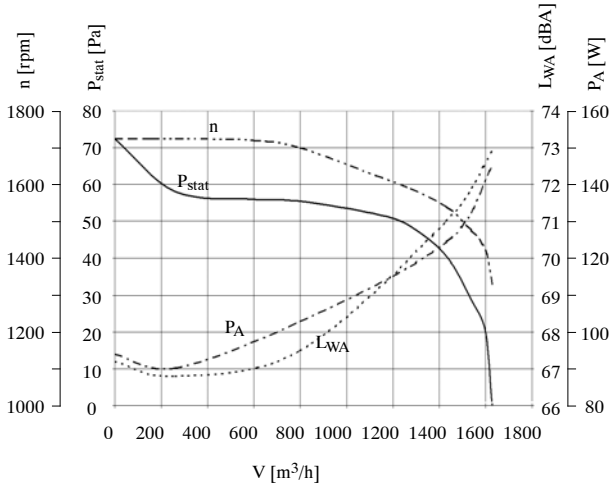

Fan curves for 827 mm nominal length

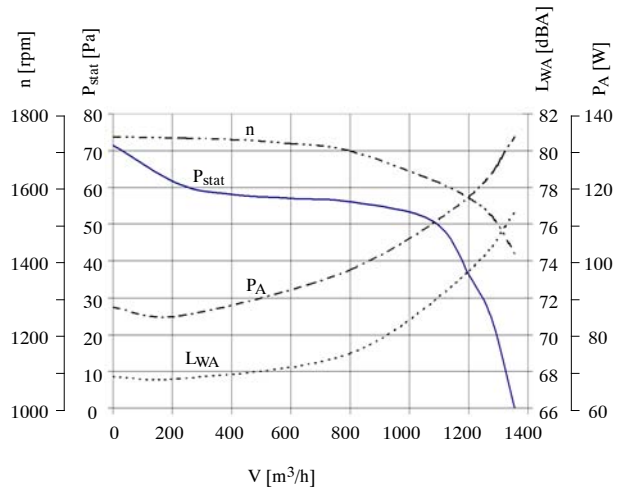

Fan curves for 597 mm nominal length

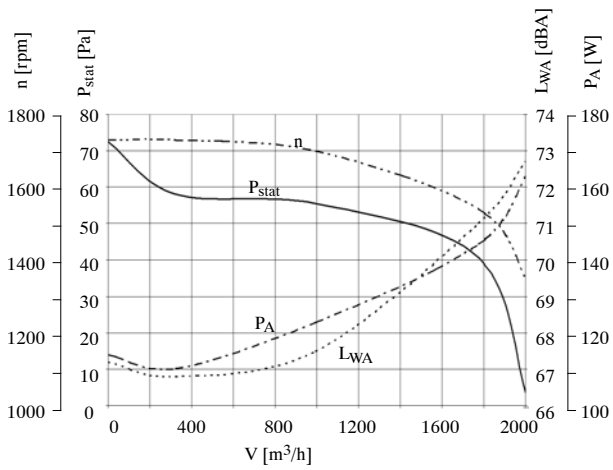

Fan curves for 1027 mm nominal length

LTG High Performance Tangential Fans
Series TA and TA t, impeller diameter 90 mm

Fan curves for 24 V

Test conditions for the fan curves

The indicated curves are valid for an air density of ϱ = 1.2 kg/m^3, an input supply voltage of U = 24 V.

The rating tests where done as laboratory tests according to EN ISO 5801:2008 with unrestricted inlet and discharge.

Measuring tolerances for Δp: $\pm$2Pa;
Measuring tolerances for L_{WA} : $\pm$2dB (A)

Acoustical data

The acoustical data are for discharge side, tested in a reverberant field.
The A-weighted sound power level L_{WA} can be transformed into an A-weighted sound pressure level by the equation L_{pA}= L_{WA} - 10 log S/1 m^2. For this the exact total panel area S can be used. The sound pressure level in the free field in 1 m distance (full spherical sound radiation) is about 11 dB less than the sound power level.

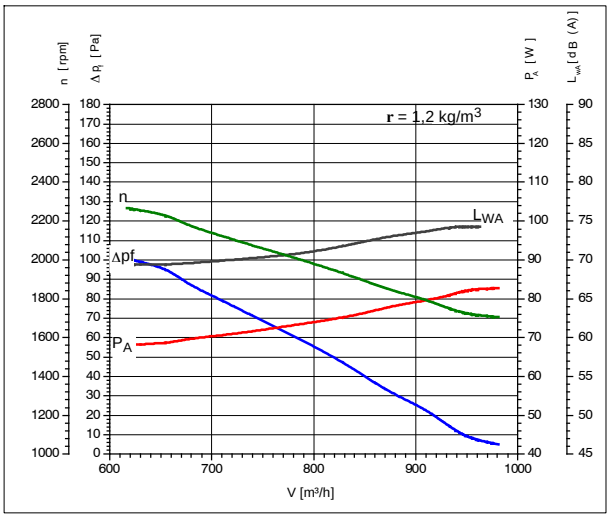

Fan curves for 397 mm nominal length

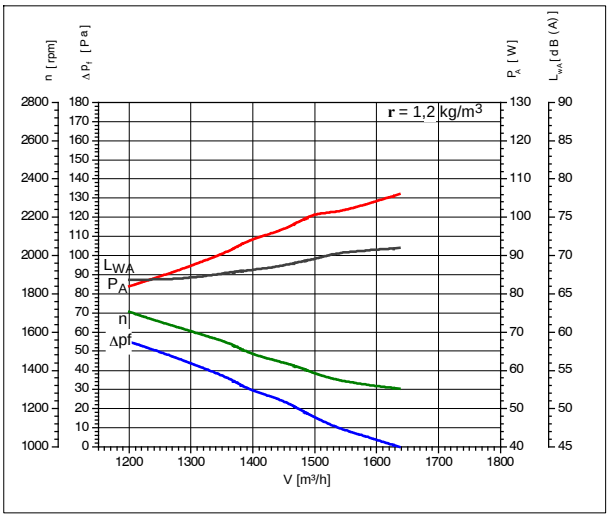

Fan curves for 827 mm nominal length

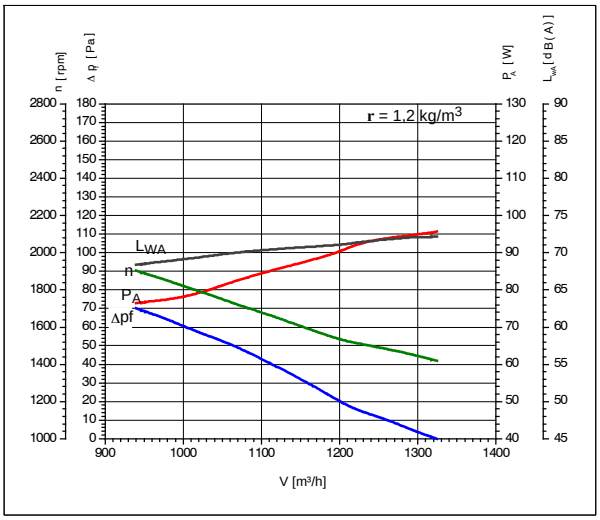

Fan curves for 597 mm nominal length

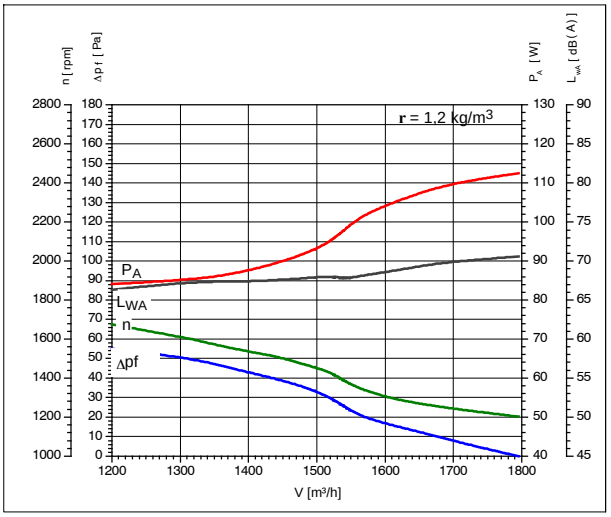

Fan curves for 1027 mm nominal length

LTG High Performance Tangential Fans
Series TE t, impeller diameter 90 mm (-25 up to +200 °C)

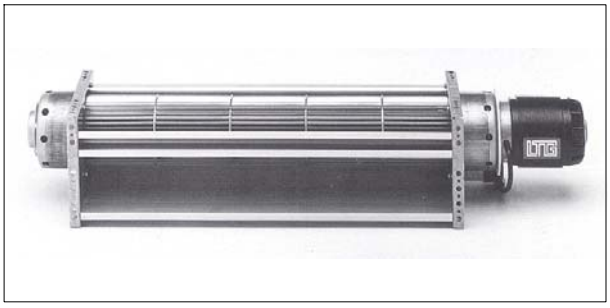

Tangential fan type TER t 90 (right hand drive)

Specification and design features

Tangential fan with close coupled, spray water protected drive motor.

Rigid bolted, corrosion proof casing. Impeller and casing of marine grade aluminium. Side elements of stainless steel (1.4301). On the drive side the impeller is bedded via an elastic coupling on the motor shaft, on the counter side via vibration dampened bearing inserted in the heat insulation cover.

Motor and end bearing side in specially greased ball bearings, made for a service life of 10,000 hours. Intake and discharge openings have sealing planes to connect exactly to ducts and appliances.

Low noise operation due to aerodynamically good impeller and scroll shape.

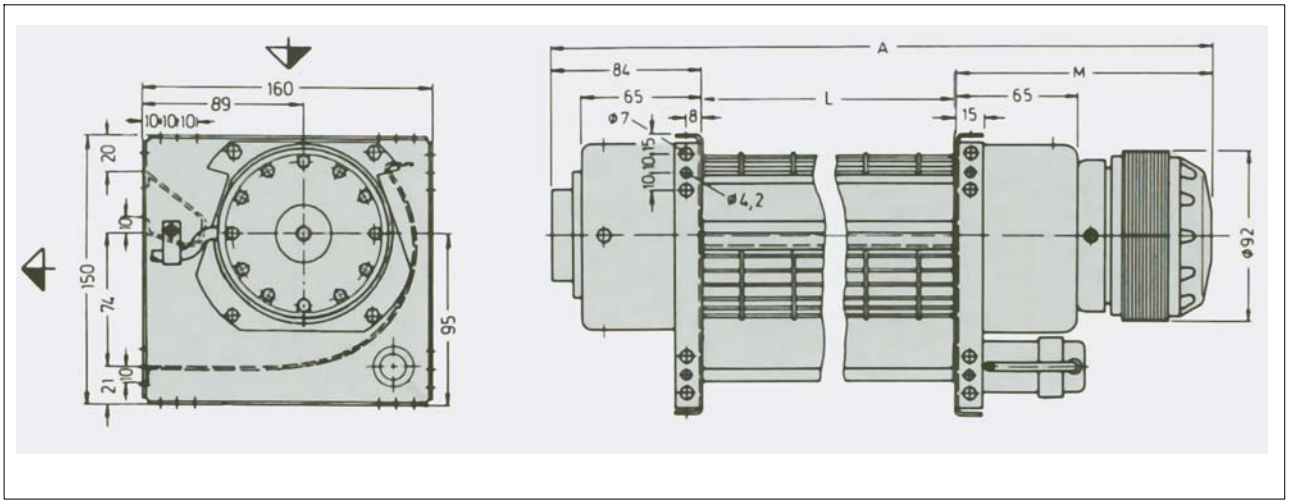

Dimensions and Performance Data

type	dimensions [mm] [inch]			air volume V	speed n	power consumption P_A	full load amps J_A	capacitor		masses
	A	L	M	[m³/h] [cfm]	[rpm]	[W]	[A]	[µF]	[V]	[kg] [lb]
TER/L t 90/497/E104	768 (30.24)	497 (19.57)	187 (7.36)	1800 (1060)	2600	430	0.8	6	400	4.5 (10)

LTG High Performance Tangential Fans
Series TEt, impeller diameter 90 mm

Fan curves for 220 V, 50 Hz

Test conditions for the fan curves

The indicated curves are valid for an air density of ϱ = 1.2 kg/m^3, a supply voltage of U = 220 V with f = 50 cps, if operated with a 4-pole motor. The rating tests where done as laboratory tests according to EN ISO 5801:2008 with unrestricted inlet and discharge.

The rating tests where done as laboratory tests according to EN ISO 5801:2008 with unrestricted inlet and discharge.

Acoustical data

The acoustical data are for discharge side, tested in a reverberant field.
The A-weighted sound power level L_{WA} can be transformed into an A-weighted sound pressure level by the equation L_{pA}= L_{WA} - 10 log S/1 m^2. For this the exact total panel area S can be used. The sound pressure level in the free field in 1 m distance (full spherical sound radiation) is about 11 dB less than the sound power level.

Measuring tolerances for Δp: ±2Pa;
Measuring tolerances for L_{WA}: ±2dB (A)

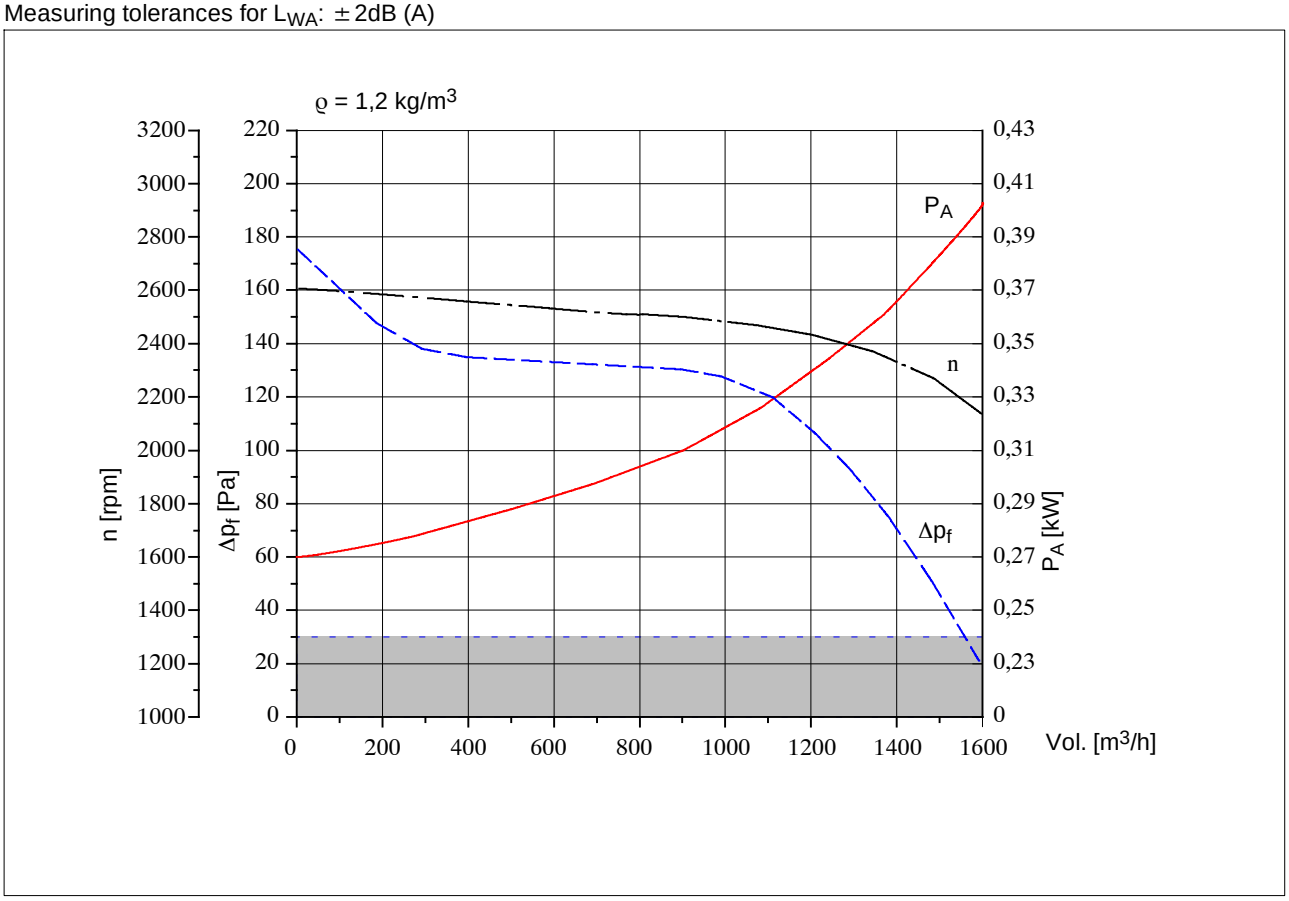

Fan curves for 497 mm nominal length

Attention! The fan is not suitable for an operation with free diffusion!
Minimum counter pressure (static) should be 30 Pa.

LTG High Performance Tangential Fans
Series TA; TA t and TA t, impeller diameter 90 mm

Selection

Application			Example	Your data
gas			hot air	
gas temperature	t	[°C]	100	
ambient temperature drive side counter side	 t t	 [°C] [°C]	 35 45	
condensation			no	
located at			drying oven	
drive side			right hand	
arrangement			horizontal	
Drive motor				
power supply			AC	
voltage	U	[V]	400 / 460	
frequency	f	[cps]	50 / 60	
Specified performance				
air volume	V	[m³/h]	800	
static pressure	Δp_f	[Pa]	25	
at specific gravity	ϱ	[kg/m³]	1.2	
active impeller length	min. L max. L	[mm] [mm]	300 600	
total length	A	[mm]	900	
Procedure				
1. conditions of application fan type			hot air 100°C TAt	
2. air volume achievable with length	V	[m³/h]	800 397 and 597	
3. static pressure achievable with length	Δp_f	[Pa]	25 597	
4. drive side			right hand	
Selected				
LTG-Tangential fan type			TARt 90/597/N	
Performance data				
air volume	V	[m³/h]	800	
static pressure	Δp_f	[Pa]	32	
dynamic pressure	p_d	[Pa]	15	
exhaust velocity	c	[m/s]	5	
speed	n	[rpm]	1290	
Electrical data				
power input	P_A	[W]	62	
full load amps	J_A	[A]	0.28	
Acoustical data				
sound power level A-weighted	L_{WA}	[dB_A]	63.9	
sound pressure level in the free field in 1 m distance (full spherical sound radiation)	L_{pA}	[dB_A]	52.9	

Designations

V	[m³/h]	air volume
Δp_f	[Pa]	static pressure
p_d	[Pa]	dynamic pressure at the discharge area
c	[m/s]	velocity at the discharge area
ϱ	[kg/m³]	specific gravity
p_d	$= \varrho/2 \bullet c^2$	$J_A = P_A/U$
n	[rpm]	speed
U	[V]	voltage
f	[cps]	frequency
J_A	[A]	full load amps
P_A	[W]	power consumption
L_{WA}	[dBA]	A-weighted sound power level
L_{pA}	[dBA]	A-weighted sound power level
S	[m²]	panel area

LTG High Performance Tangential Fans
Series GA, impeller diameter 90 mm

The tangential fan series GA 90 is used when an airflow deflection of 180° is required.

This Series is equipped with enhanced corrosion resistance and is suitable for an extended temperature range.

Service conditions

Air / gas temperatures:
-40 °C up to +70 °C °C

Ambient temperatures:
drive side with motor: -25 °C up to +40 °C
the counter side: -40 °C up to +70 °C

Series GA, the range

type	air / gas temperatures	impeller length	casing	impeller	motor*	
GAR/L 90/397/N	-40°C to +70°C (-40°F to +158°F)	397 mm (15.63 inch)	marine grade aluminium	marine grade aluminium	230 V, 50/60 Hz 240 V, 50 Hz	IP 44
GAR/L 90/597/N		597 mm (23.5 inch)			230 V, 50/60 Hz 240 V, 50 Hz	
GAR/L 90/827/N		827 mm (32.56 inch)			230 V, 50 Hz 240 V, 50 Hz	
GAR/L 90/1027/N		1027 mm (40.43 inch)			220 V, 50 Hz	

**) The standard motor can be used for every voltage and frequency indicated.*

LTG High Performance Tangential Fans
Series GA, impeller diameter 90 mm (-40 up to +70 °C)

Tangential fan type GAR 90 (right hand drive)

Specification and design features

Tangential fan with close coupled, spray water protected drive motor.

Rigid bolted, corrosion proof casing. Impeller and casing of marine grade aluminium. Side elements of stainless steel (1.4301). On the drive side the impeller is bedded via an elastic coupling on the motor shaft; on the counter side in vibration damped friction bearings from sinter bronze with an ample grease reserve.

Bearing design life is 20 000 hours. Drive motor wired with capacitor and terminal block. Intake and discharge openings have sealing planes to connect exactly to ducts and appliances.

Low noise operation due to aerodynamically good impeller and scroll shape.

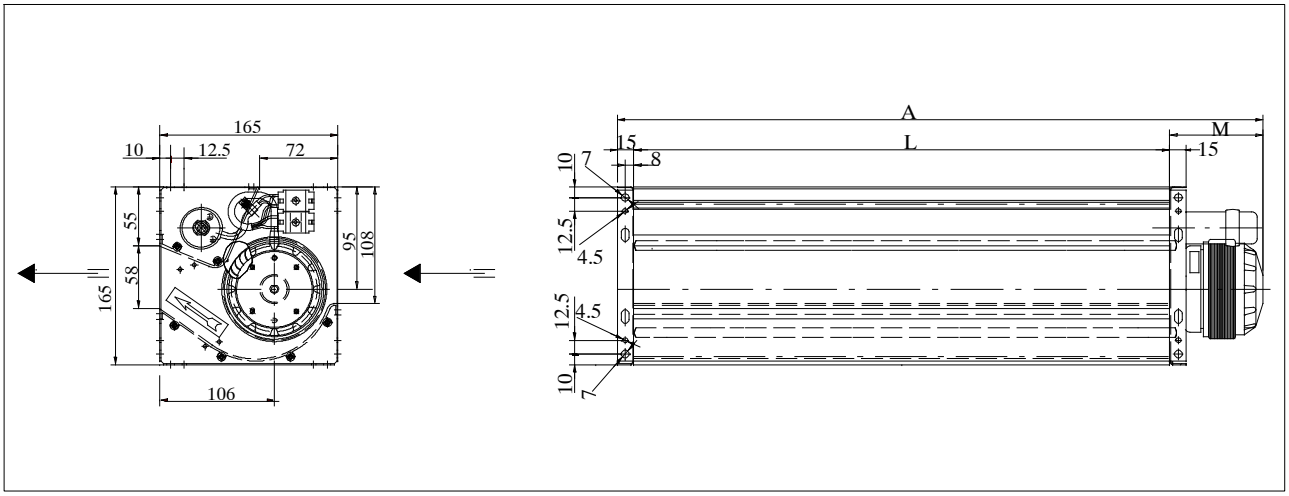

Dimensions and performance data

type	dimensions [mm] [inch]			air volume	speed n	power con-sumption P_A	power con-sumption P_A	capacitor		masses
	A	L	M	[m³/h] [cfm]	[min⁻¹]	[W]	[A]	[µF]	[V]	[kg] [lb]
GAR/L 90/397/N	502 (19.73)	397 (15.63)	87 (3.43)	630 (371)	1330	67	0.31	2	400	3.4 (7.5)
GAR/L 90/597/N	702 (27.63)	597 (23.5)	87 (3.43)	910 (536)	1260	75	0.34	2	400	4.1 (9)
GAR/L 90/827/N	950 (37.4)	827 (32.6)	105 (4.13)	1330 (783)	1340	95	0.43	4	400	5.4 (11.9)
GAR/L 90/1027/N	1150 (45.28)	1027 (40.43)	105 (4.13)	1600 (942)	1280	119	0.53	4	400	6.1 (13.45)

LTG High Performance Tangential Fans
Series GA, impeller diameter 90 mm

Fan curves for 220 V, 50 Hz

Test conditions for the fan curves

The indicated curves are valid for an air density of $\varrho = 1.2\ kg/m^3$, a supply voltage of U = 220 V with f = 50 cps, if operated with a 4-pole motor. The rating tests where done as laboratory tests according to EN ISO 5801:2008 with unrestricted inlet and discharge.

Measuring tolerances for Δp: ± 2Pa;
measuring tolerances for L_{WA} : ± 2dB (A)

Acoustical data

The acoustical data are for discharge side, tested in a reverberant field.
The A-weighted sound power level L_{WA} can be transformed into an A-weighted sound pressure level by the equation $L_{pA} = L_{WA} - 10 \log S/1\ m^2$. For this the exact total applicable panel area S can be used. The sound pressure level in the free field in 1 m distance (full spherical sound radiation) is abt. 11 dB less than the sound power level.

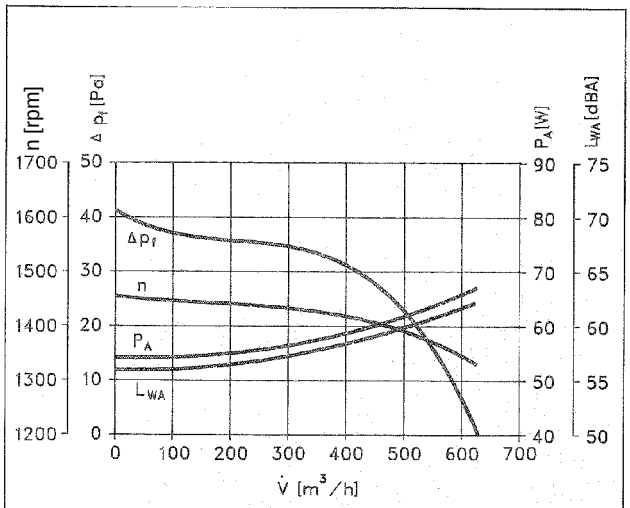

Fan curves for 397 mm nominal length

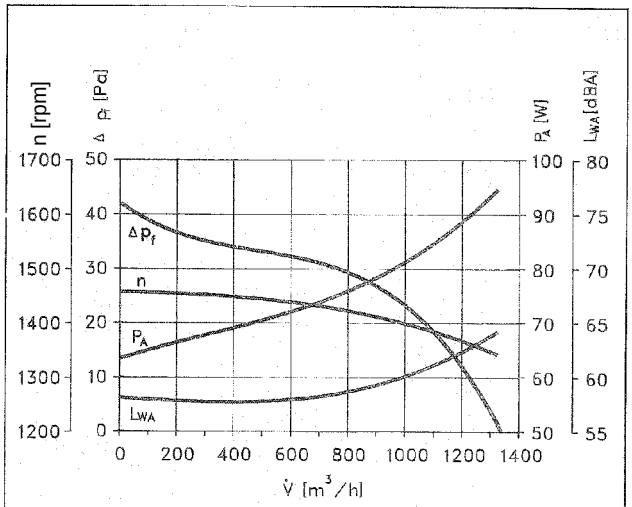

Fan curves for 827 mm nominal length

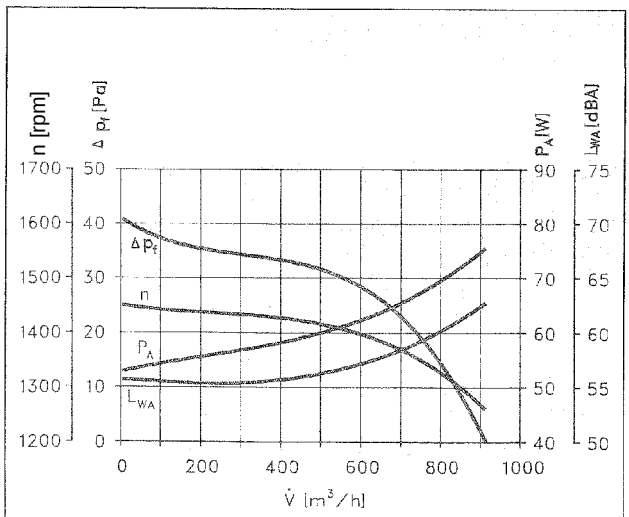

Fan curves for 597 mm nominal length

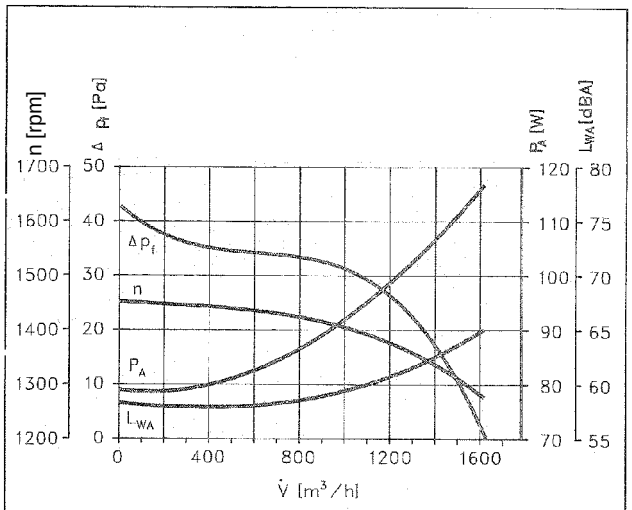

Fan curves for 1027 mm nominal length

LTG High Performance Tangential Fans
Series GA, impeller diameter 90 mm

Selection

Application			Example	Your data
gas			warm air	
gas temperature	t	[°C]	60	
ambient temperature drive side counter side	 t t	 [°C] [°C]	 35 45	
condensation			no	
located at			drying oven	
drive side			right hand	
arrangement			horizontal	
Drive motor				
power supply			AC	
voltage	U	[V]	400 / 460	
frequency	f	[cps]	50 / 60	
Specified performance				
air volume	V	[m³/h]	800	
static pressure	Δp_f	[Pa]	25	
at specific gravity	ϱ	[kg/m³]	1.2	
active impeller length	min. L[mm] max. L[mm]		600 900	
total length	A	[mm]	900	
Procedure				
1. conditions of application fan type			warm air 60°C GA	
2. air volume achievable with length	V	[m³/h]	800 397 and 827	
3. static pressure achievable with length	Δp_f	[Pa]	25 827	
4. drive side			right hand	
Selected				
LTG-Tangential fan type			GAR 90/827/N	
Performance data				
air volume	V	[m³/h]	800	
static pressure	Δp_f	[Pa]	29	
dynamic pressure	p_d	[Pa]	13	
exhaust velocity	c	[m/s]	4.6	
speed	n	[rpm]	1420	
Electrical data				
power input	P_A	[W]	76	
full load amps	J_A	[A]	0.35	
Acoustical data				
sound power level A-weighted	L_{WA}	[dB_A]	58	
sound pressure level in the free field in 1 m distance (full spherical sound radiation)	L_{pA}	[dB_A]	47	

Designations

V	[m³/h]	air volume
Δp_f	[Pa]	static pressure
p_d	[Pa]	dynamic pressure at the discharge area
c	[m/s]	velocity at the discharge area
ϱ	[kg/m³]	specific gravity
p_d	$= \varrho/2 \bullet c^2$	$J_A = P_A/U$
n	[rpm]	speed
U	[V]	voltage
f	[cps]	frequency
J_A	[A]	full load amps
P_A	[W]	power consumption
L_{WA}	[dBA]	A-weighted sound power level
L_{pA}	[dBA]	A-weighted sound power level
S	[m²]	panel area

LTG High Performance Tangential Fans
Series TA, TA t, TE t and GA, impeller diameter 90 mm

5-step transformer up to 100 watt

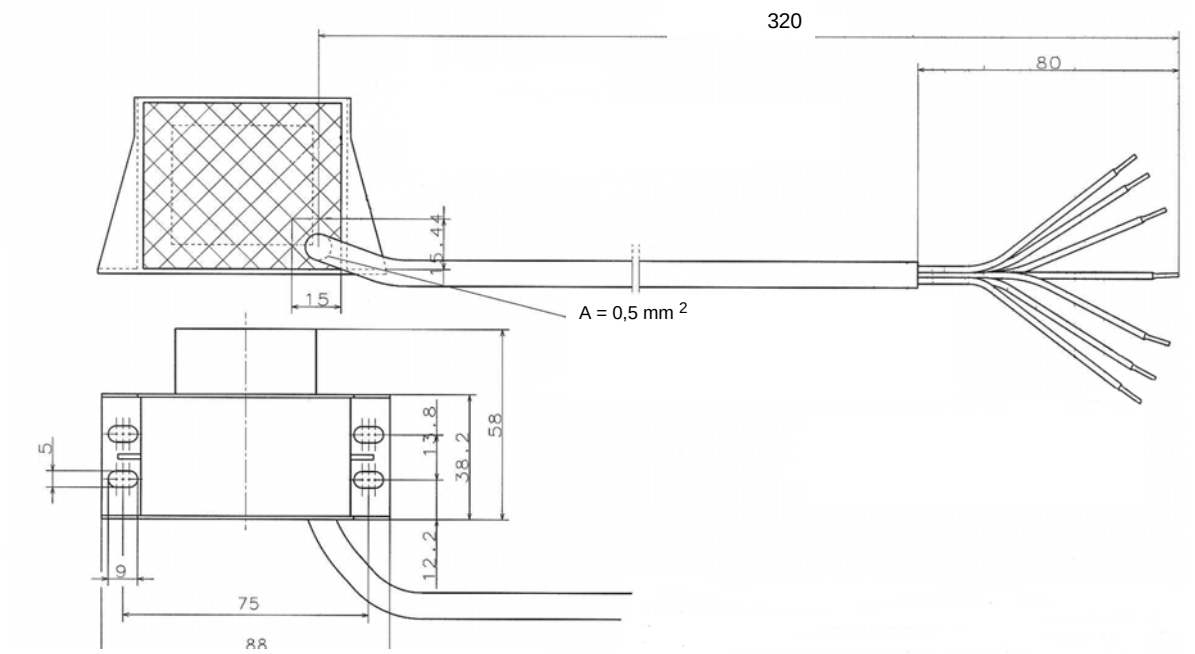

Primary voltage:	230 V	colour black
Secondary voltage:	0 V	colour blue
	80 V	colour red
	100 V	colour green
	120 V	colour white (nature)
	140 V	colour brown
	185 V	colour violet
Protection class	IP 65	

AIR TECH
SYSTEMS

Comfort Air Technology

Air Conditioning Systems

- Decentralized Facade Ventilation Units
- Fan Coil Units
- Induction Units,
  Active Chilled Beams

Air Diffusers

- Linear Air Diffusers
- Wall and Floor Mounted Air Diffusers
- Swirl Diffusers
- Industrial and Special Air Diffusers

Air Distribution

- Flow Rate and Pressure Controllers
- Shut-off and Balancing Dampers
- Silencers

Process Air Technology

Fans

- Tangential Fans
- Axial Fans
- Centrifugal Fans
- Fahrtwind-Simulators

Filtration Technology

- Suction Nozzles
- Dampers
- Filters, Dust Collectors
- Separators, Compactors

Humidification Technology

- Air Humidifiers
- Product Humidifiers

Engineering Services

Fluid Engineering

- Flow analysis
- Flow visualization
- CFD-simulations
- Flow optimization
- Air conditioning concepts

Thermodynamics

- Calorimetric performance measurement
- Thermal, dynamic, unsteady,
  system simulations

Acoustics

- Sound level measuring
- Vibration analysis
- Echo chamber measurement
- Acoustic optimization

Comfort

- Evaluation
- Optimization

Customer-specific Solutions

- Product development
- Process optimization
- Installation analysis

LTG Aktiengesellschaft
Grenzstraße 7
70435 Stuttgart
Germany
Tel.: +49 (711) 8201-0
Fax: +49 (711) 8201-696
E-Mail: info@LTG.net
www.LTG.net

LTG Incorporated
105 Corporate Drive, Suite E
Spartanburg, SC 29303
USA
Tel.: +1 (864) 599-6340
Fax: +1 (864) 599-6344
E-Mail: info@LTG-INC.net
www.LTG-INC.net

TA / TE / GA90-eng-TP (09/16) 450-22